TP SERIES

Systemtechnik AG

SOURIAU

# TP Series

## Sealed Connectors


**Überreicht durch:**
**Offizieller Distributor:**

**JOWO - Systemtechnik AG**
**Lange Wand 12**
**27753 Delmenhorst**
**Deutschland**

**WEB: www.jowo.ag**
**Mail: info@jowo.ag**

**Telefon: +49 4221 - 916495 - 0**

## Presentation

The TP Series connectors meet the highest standards of safety for aquatic environment. It is currently used in many applications: vessels, civil construction, diving, heavy industry…

The TP Series feature a large range of shell styles and layouts. Derived from the widely recognized marine bronze M Series, the TP Series are the perfect trade off between high performances and cost efficiency.

## Contents


### Overview

Typical applications ..... 6
Features & Benefits ..... 7
Range overview ..... 10

### Product Details

Technical features ..... 14
Ordering information ..... 16
Contacts ..... 18
Contact layouts ..... 19
Cable clamp accessories ..... 21
Shell dimensions ..... 22
Spare parts ..... 31
Tools ..... 32

### Other Series

SWIM Series ..... 36
M Series ..... 36
U Series ..... 37
8810 Series ..... 37

TP SERIES

© 2016 SOURIAU - SOURIAU is a registratred trademark

TP Series

# Overview


- Typical applications ..... 6
- Features & Benefits ..... 7
- Range overview ..... 10

## Typical applications

Heavy Industry

Diving

Civil Construction

Geophysics

Water Treatment

Vessels

## Features & Benefits

FIELD PROVEN

### Used in Aquatic Environment

Oil and gas services: Geophysics, inspection or instrumentation
Water treatment: Pumps, valves, sewage system
Civil construction: Tunnels, dams, buildings
Underwater instrumentation: Buoys, sensors, cameras, lights

ROBUST

### Designed for Harsh Environment

Temporary immersion in sea water
Prolonged immersion in freshwater and use in presence of mud, sand…
High resistance to cable pull out or transverse forces
Repairable connectors with removable inserts

PERFOR-MANCES

### High Performance Levels

Waterproof down to 300 meters depth
No stress on O-rings by conical coupling
Withstanding 500 mating/unmating cycles

EASY COUPLING

### Keying and Easy Coupling

Easy coupling/uncoupling operation even with high density layout
5-key mechanical polarization
Scoop proof to prevent contact damage

# Features & Benefits

## Sealed and reliable connectors

- **Field proven « Harpoon » contact technology for contact to insert sealing**
- **O-ring for insert to shell sealing on both receptacle and plug**
- **Redundancy with 2 O-rings on plug taper seat**
- **Conical coupling interface to reduce the stress on O-rings**

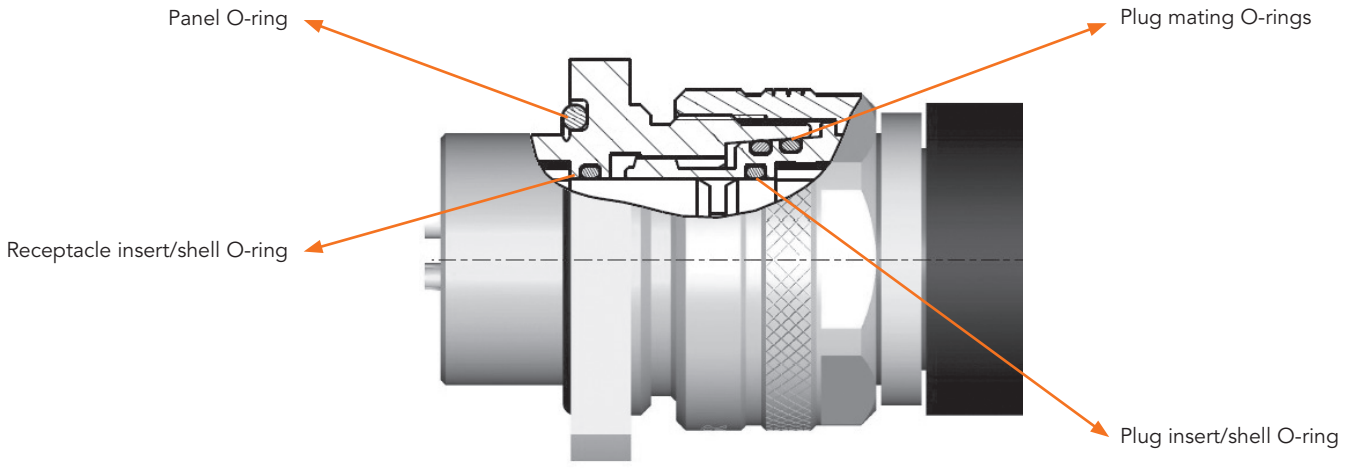


## High performance sealing and mechanical retention

**Perfect sealing on cable jacket** is achieved with the compression of a pressure gland integrated into the plug's backshell. Robust cable clamp ensures the **mechanical retention of the cable.** A removable protective boot is added on the backshell for additional sealing and cable support.

TP type cable clamp set example

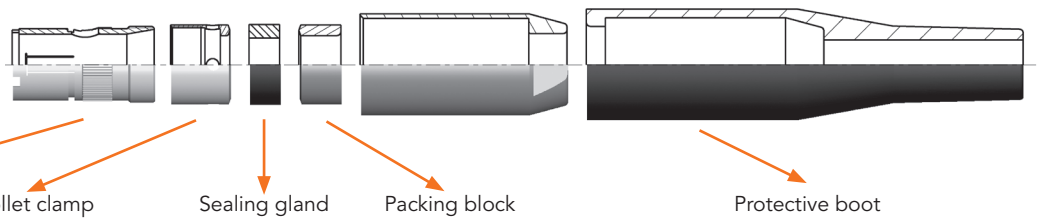

# Features & Benefits

## High grade materials

- Shells are made of nickel plated brass specially designed for industry requirements regarding watertight products in harsh environment. This material provides a good corrosion resistance in sea environment, a high electrical conductivity along with good mechanical properties and resistance to biological fouling.
- O-rings are made from Nitrile for excellent fluid compatibility (sea water, mineral oil…) and long durability.
- Contacts are gold over nickel plated brass.
- RoHS compliant.

## Easy wiring and installation

- Scoop proof: No risk of damaging contacts during the coupling operation when using a female plug and a male receptacle.
- Removable insulators: To allow easy wiring and replacement in case of wiring mistakes or servicing.
- Easy mating: Easy coupling operation thanks to the screw coupling and locking even with a high number of contact
- Equipment protection: No coupling mistake thanks to the polarization key.

## Range

### Receptacles

REC

RER

### Cable Receptacles

RECSC

### Feedthroughs

TER

TEC

### In-Line Receptacles

PCE

### Pressure Sealing Cap for Plug

BEF

## overview

FED

**Plugs**

BER

**Pressure Sealing Cap for Receptacle**

TP SERIES

© 2016 SOURIAU - SOURIAU is a registratred trademark

TP Series

# Product Details


- Technical features ..... 14
- Ordering information ..... 16
- Contacts ..... 18
- Layouts ..... 19
- Cable clamp accessories ..... 21
- Shell dimensions ..... 22
- Spare parts ..... 31
- Tools ..... 32

## Description

- Sealed connectors
- Screw coupling
- Sealing between plug and receptacles performed by 2 O-rings
- Sealing on cable thanks to packing washer

# Technical features

## Mechanical

- **Shell:**
  Nickel plated brass
- **Insulator:**
  PA6/6+MOS2 - Nylatron® (N)
  PTFE – Teflon® (T) (on request for reduced water absorption and increased pressure withstand when unmated)
- **O-rings:**
  Nitrile elastomer
- **Contacts:**
  Brass
- **Contacts:**
  Brass with gold over nickel plated
- **Packing washers and Protection boot:**
  Neoprene® Elastomer
- **Endurance:**
  500 mating/unmating operations
- **Shock:**
  Static acceleration of 120g on each axis
- **Vibration:**
  From 1 to 5 Hz: acceleration = 0.1g
  From 5 to 22 Hz: amplitude = 1mm
  From 22 to 50 Hz: acceleration = 2g
  Duration: 1 hour on each axis

## Electrical

- **Voltage rating (Vrms)**

| Voltage Category | SOURIAU recommended service voltage (Vrms 50 Hz) | Dielectric Withstanding Voltage (Vrms 50Hz) |
|---|---|---|
| **Service 1** | 600 | 1500 |
| **Service 2** | 1000 | 2300 |

- **Insulation resistance:**
  Unmated connectors : ≥ $10^4$ MΩ
  Mated connectors : ≥ $5x10^3$ MΩ on 500 Vcc
- **Shielding:**
  Connectors mated: Resistance between the receptacle plate and the plug's cable braid : ≤ 10 mΩ

- **Current rating and contact resistance:**

| Shell size | Contact size | Current rating per contact (A) | Contact resistance (mΩ) |
|---|---|---|---|
| **8TP 10TP 14TP 20TP** | 20 | 7 | ≤ 4 |
| | 16 | 14 | ≤ 3 |
| | 14 | 20 | ≤ 2.5 |
| | 12 | 26 | ≤ 2 |
| | 6 | 65 | ≤ 1 |
| | 2 | 115 | ≤ 0.6 |
| **10TP** | Coaxial 50Ω | 20 | ≤ 2.5 |
| | Coaxial 75Ω | 7 | ≤ 4 |
| **10TP** | Triaxial 50Ω | 7 | ≤ 4 |
| **20TP** | Coaxial 50Ω | | |
| **10TP** | Triaxial 75Ω | 4 | ≤ 5 |
| **20TP** | Coaxial 75Ω | | |
| **14TP** | Coaxial 50Ω | 40 | ≤ 1.5 |
| | Triaxial 50Ω | 26 | ≤ 2 |
| | Triaxial 75Ω | 14 | ≤ 3 |

## Environmental

- **Operating temperature range:**
  - 20°C to + 70°C
- **Watertightness**

| Mated | Unmated |
|---|---|
| 30 bar | 5 bar |

- **Salt spray**
  - 10 x (24h + 24h) alternate salt spray according to EN60068-2-11
  - 500h continuous salt spray according to NFC93422
- **Fluids Resistance**
  - Oil, alcohol, petrol, diesel fuel, sea water
  - Various gases (natural, butane, propane, Freon)
  - Various acids (acetic, boric, citric)

# Ordering information

| Product builder | | | |
|---|---|---|---|
| **N°** | **Criterias** | **Choices** | **Pages** |
| **1** | Wires type and gauge | Minimum contact size | 18 |
| **2** | Number of contact to connect | Contacts layout | 19 |
| **3** | Electrical characteristics | Layout and shell size | 14 |
| **4** | Cable diameters | Size checking | 21 |
| **5** | Shell dimensions | Shell type consistency | 10-11 |

## Recommendations

### Watertightness of the TP Series connectors

Watertightness is achieved through the use of a packing-block and performance will depend on cable quality:
. Hardness (shore A hardness > 70 is recommended)
. Cylindricity and circularity
. Roughness
. Cable outer diameter tolerance (maximum tolerance of 1 mm on outer diameter is recommended)

## TP Series connectors part numbers

| | PCE | M | 14TP | N | 04 16 | U | 095 |
|---|---|---|---|---|---|---|---|

**Shell type**
- **RER:** Jam-nut receptacle
- **REC:** Screws mounting receptacle
- **FED:** Straight plug
- **PCE:** In-line receptacle
- **RECSC:** Screws mounting cable connecting receptacle
- **TER:** Jam-nut feedthrough
- **TEC:** Screws mounting feedthrough

**Type of contacts**
- **M:** Pin contact
- **F:** Socket contacts
- **1:** Pin/Socket (for TEC and TER feedthroughs only)

**Shell size**
- 8TP
- 10TP
- 14TP
- 20TP

**Insulating material**
- **N:** Nylatron® (PA6/6+MOS2)
- **T:** Teflon® (PTFE) (Available on request)

**Contact layouts**
- See layout tables page 19 - 20

**Cable clamp code**
- **U**: Possible braid or armor termination

**Maximum cable outer diameter** (in tenth of mm, adjusted at upper five tenth). Example: For a 9.2mm outer diameter cable, the code is 095.
**Cable code for coaxial, tri-axial,** (Please consult us)
Nothing for RER, REC, TER & TEC

## Pressure sealing cap part numbers

| | BER | C | 10TP |
|---|---|---|---|

**Cap type**
- **BER:** For receptacles
- **BEF:** For plugs

**Cord set**
- **C:** With cord
- **-:** Without cord (no mention)

**Shell size**
- 8TP
- 10TP
- 14TP
- 20TP

## Contacts - Size 2 to 20

| Shell size | Contact size | Ø A (mm) Active contact OD | Ø F (mm) Contact Termination OD | Gauge AWG | Section (mm²) | Definition |
|---|---|---|---|---|---|---|
| 8TP | 20 | 1,02 | 0,9 | 26 to 22 | 0,14 to 0,38 | Pin 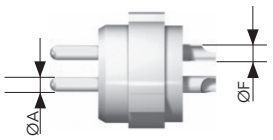  |
| | 16 | 1,59 | 1,2 | 24 to 20 | 0,21 to 0,60 | |
| 10TP 14TP 20TP | 20 | 1,02 | 0,9 | 26 to 22 | 0,14 to 0,38 | Socket 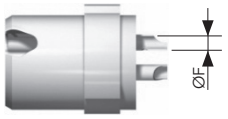  |
| | 16 | 1,59 | 1,4 | 22 to 18 | 0,38 to 0,93 | |
| | 14 | 1,92 | 1,87 | 18 to 16 | 0,93 to 1,34 | |
| | 12 | 2,38 | 2,3 | 16 to 14 | 1,34 to 1,91 | |
| | 6 | 5 | 6,2 | 8 to 6 | 8,98 to 13,4 | Pin |
| | 2 | 7 | 9 | 4 to 2 | 21,8 to 34,5 | Socket |

## Contacts - Coaxial, triaxial*

| Shell size | Contact size | Ø A (mm) Front of contact | Ø F (mm) Inside the solder bucket | Removable contact | |
|---|---|---|---|---|---|
| 10TP | Coaxial 50Ω | 1,93 | 2,4 | No | Pin |
| | Coaxial 75Ω | 1,02 | 1,5 | | |
| 14TP | Coaxial 50Ω | 3,98 | 3 | | Socket 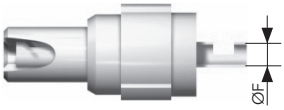  |
| 10TP | Triaxial 50Ω | 0,9 | 1,2 | Yes | Pin |
| 20TP | Coaxial 50Ω | | | | |
| 10TP | Triaxial 50Ω | 0,7 | 0,8 | | Socket |
| 20TP | Coaxial 75Ω | | | | |
| 14TP | Triaxial 50Ω | 3 | 2,6 | No | |
| | Triaxial 75Ω | 1,59 | 1,4 | | |

* Please consult us with your cable specification

# Contact layouts

## Size 8TP

**0416**

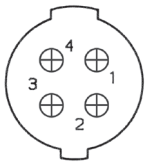


4#16
Service 2

**0720**

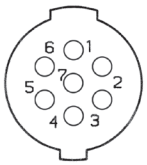


7#20
Service 1

## Layout caption

**Layout ID for part numbering**

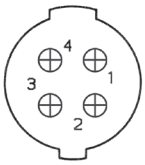


Number of contacts #Size
Voltage Service Rating

## Size 10TP

**TX75***
**TX50***

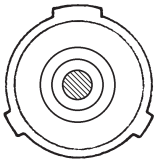

1TX#75 or 1TX#50
Service 1

**1C75***
**1C50***

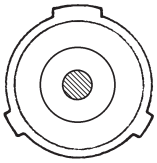

1C#75 or1C#50
Service 1

**0214**

2#14
Service 2

**0314**

3#14
Service 2

**0416**

4#16
Service 2

**0516**

5#16
Service 1

**0320**

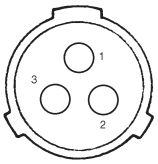


3#20
Service 2

**0720**

7#20
Service 1

**Contact Type**

| 20 | 16 | 14 | 12 | 6 | 2 | Coax. | Triax. |
|---|---|---|---|---|---|---|---|

*Please consult us for coax and triax layouts

# Contact layouts

## Size 14TP

**TX75***
**TX50***

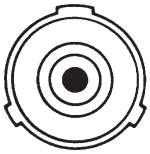

1TX#75 or 1TX#50
Service 2

**1C50***

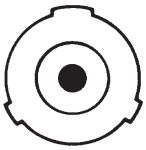

1C#50
Service 2

**0106**

1#06
Service 2

**0312**

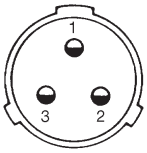


3#12
Service 2

**0412**

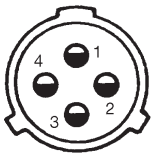


4#12
Service 2

**0714**

7#14
Service 2

**1216**

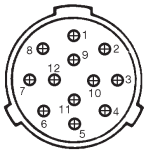

12#16
Service 2

**1920**

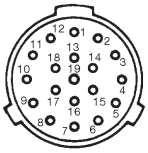

19#20
Service 1

## Size 20TP

**4C75***
**4C50***

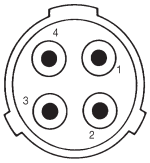

4C#50 or 4C75Ω
Service 1

**0102**

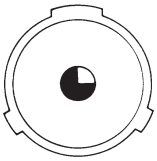

1#02
Service 2

**0306**

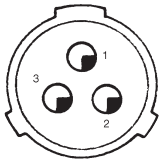

3#06
Service 2

**0406**

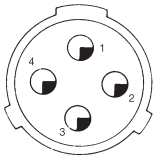

4#06
Service 2

**0712**

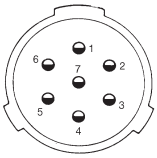

7#12
Service 2

**1612**

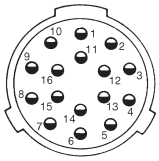

16#12
Service 2

**2114**

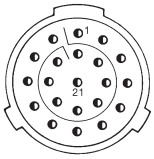

21#14
Service 1

**2716**

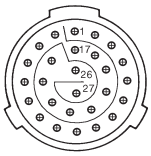

27#16
Service 1

**3216**

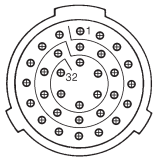

32#16
Service 1

**4120**

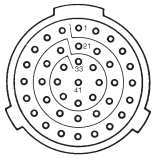

41#20
Service 1

**Contact Type**

*Please consult us for coax and triax layouts

# Cable clamp kits

| Cable clamp code | Grounding | Size | |
|---|---|---|---|
| U | YES | 8TP<br>10TP<br>14TP<br>20TP | 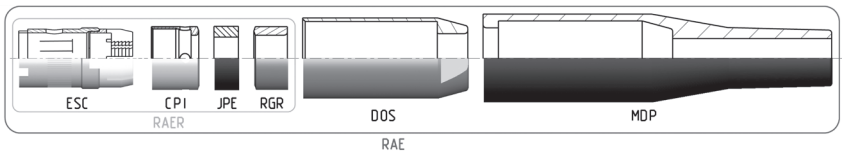 |

| Cable code | Description | Acceptable cable outer diameter | | | |
|---|---|---|---|---|---|
| | | 8TP | 10TP | 14TP | 20TP |
| U | Standard cable clamp with braid or armor termination | Ø4 to Ø6,2 | Ø5 to Ø11 | Ø9 to Ø16 | Ø16 to Ø26 |

| | | | |
|---|---|---|---|
| **CPI** | Collet clamp | **RGR** | Packing block |
| **ESC** | Cabling spacer | **JPE** | Rubber washer |
| **DOS** | Outer sleeve | **MDP** | Protective boot |



Note: All dimensions are in millimeters (mm)

# Shell dimensions

## RER - Jam-nut receptacle

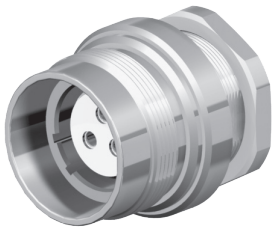

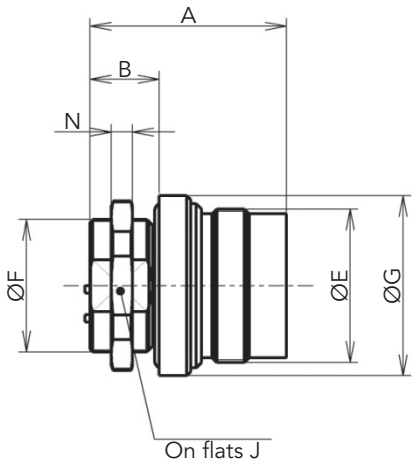


**Panel cut-out**

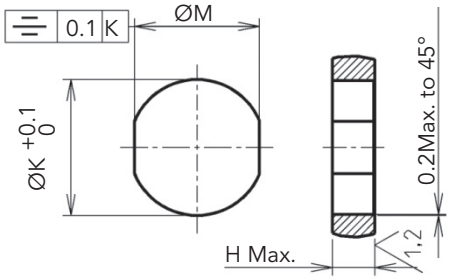


| Shell size | 8TP | 10TP | 14TP | 20TP |
|---|---|---|---|---|
| **A** | 23 | 37 | 37 | 49,5 |
| **B** | 8.5 | 14 | 13 | 17 |
| **Ø E (ISO)** | M17 x 1 | M21 x 1 | M29 x 1 | M41 x 1 |
| **Ø F (ISO)** | M14 x 0.75 | M18 x 0.75 | M25 x 0.75 | M36 x 1 |
| **Ø G** | 20 | 25 | 34 | 46 |
| **H Max.** | 5 | 10 | 9 | 12 |
| **On flats J** | 17 | 22 | 30 | 41 |
| **Ø K$^{+/-0.1}$** | 14.2 | 18.2 | 25.2 | 36.2 |
| **M** | 13.2 | 16.2 | 23.2 | 33.2 |
| **N** | 3 | 4 | 4 | 5 |

Note: All dimensions are in millimeters (mm)

# Shell dimensions

## REC - Square flange receptacle

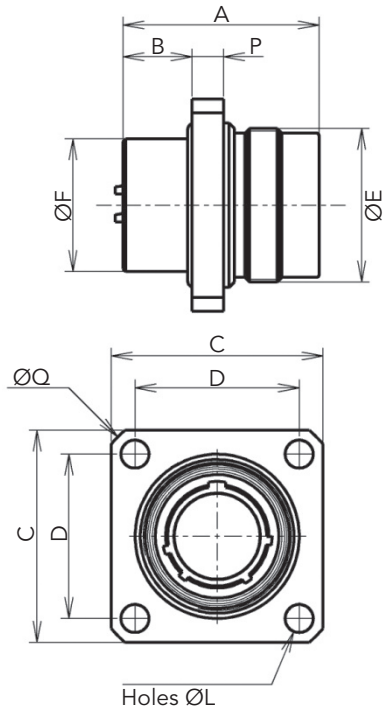


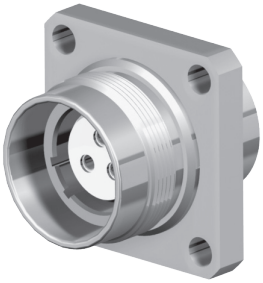

**Panel cut-out**

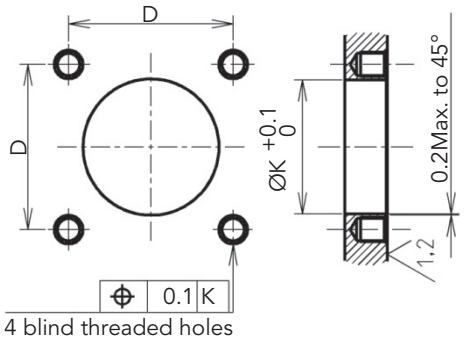


| Shell size | 8TP | 10TP | 14TP | 20TP |
|---|---|---|---|---|
| **A** | 23 | 37 | 37 | 49.5 |
| **B** | 4 | 14 | 13 | 17 |
| **C** | 23 | 32 | 40 | 52 |
| **D** | 17.5 | 24 | 31 | 42 |
| **Ø E (ISO)** | M17 x 1 | M21 x 1 | M29 x 1 | M41 x 1 |
| **Ø F** | 14 | 18 | 25 | 36 |
| **Ø K$^{+/-0.1}$** | 14.2 | 18.2 | 25.2 | 36.2 |
| **Ø L** | 3.2 | 4.3 | 5.3 | 6.3 |
| **P** | 3 | 5 | 6 | 8 |
| **Ø Q Max.** | 31.5 | 42.5 | 53.5 | 70.5 |
| **R (ISO)** | M3 | M4 | M5 | M6 |

Note: All dimensions are in millimeters (mm)

# Shell dimensions

## TER - Jam-nut feedthrough

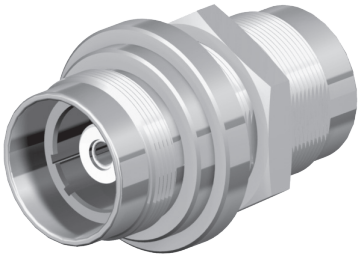

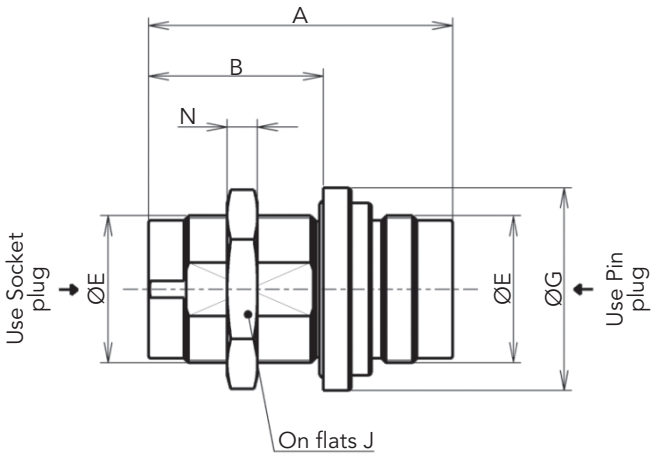


**Panel cut-out**

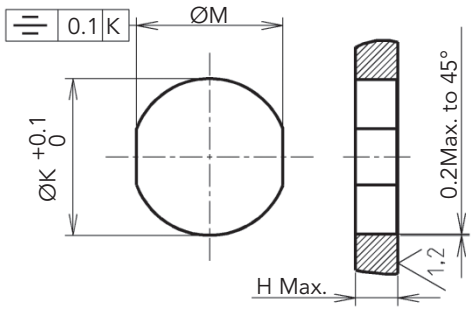


| Shell size | 8TP | 10TP | 14TP | 20TP |
|---|---|---|---|---|
| A | 50 | 60 | 60 | 82 |
| B | 34.5 | 35.5 | 34.5 | 47.5 |
| Ø E (ISO) | M17 x 1 | M21 x 1 | M29 x 1 | M41 x 1 |
| Ø G | 23 | 28 | 40 | 52 |
| H Max. | 19 | 16 | 13 | 22 |
| On flats J | 20 | 24 | 34 | 46 |
| Ø $K^{+/-0.1}$ | 17.2 | 21.2 | 29.2 | 41.2 |
| M | 14.2 | 19.2 | 27.2 | 39.2 |
| N | 4 | 4 | 6 | 5 |

Note: All dimensions are in millimeters (mm)

# Shell dimensions

## TEC - Square flange feedthrough

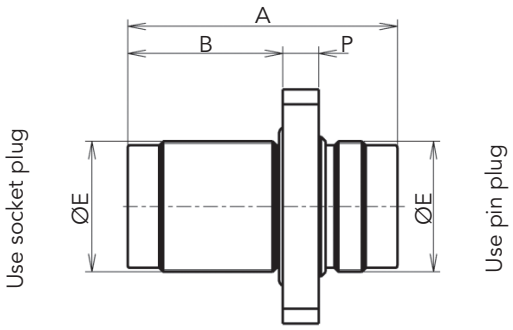


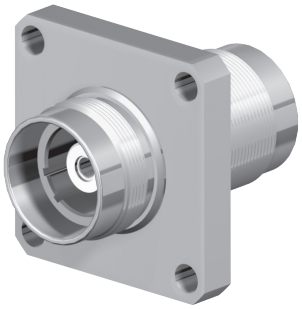

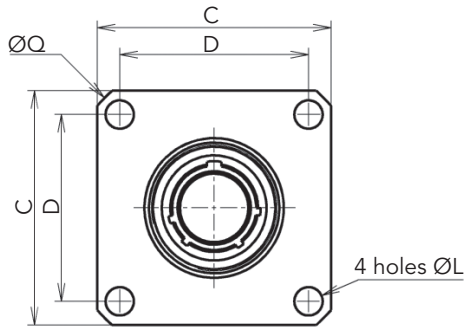


**Panel cut-out**

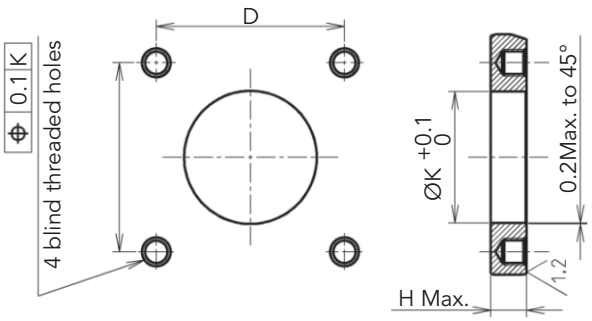


| Shell size | 8TP | 10TP | 14TP | 20TP |
|---|---|---|---|---|
| A | 50 | 60 | 60 | 82 |
| B | 34.5 | 35.5 | 34.5 | 47.5 |
| C | 32 | 40 | 52 | 76 |
| D | 24 | 31 | 42 | 60 |
| Ø E (ISO) | M17 x 1 | M21 x 1 | M29 x 1 | M41 x 1 |
| H Max. | 23 | 20 | 19 | 27 |
| Ø $K^{+/-0.1}$ | 17.2 | 21.2 | 29.2 | 41.2 |
| Ø L | 4.3 | 5.3 | 6.3 | 8.5 |
| P | 4 | 6 | 8 | 9 |
| Ø Q Max. | 42.5 | 53.5 | 70.5 | 100.5 |
| R (ISO) | M4 | M5 | M6 | M8 |

Note: All dimensions are in millimeters (mm)

# Shell dimensions

## RECSC - Square flange cable connecting receptacle

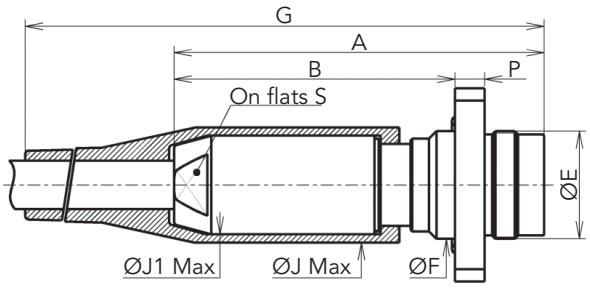


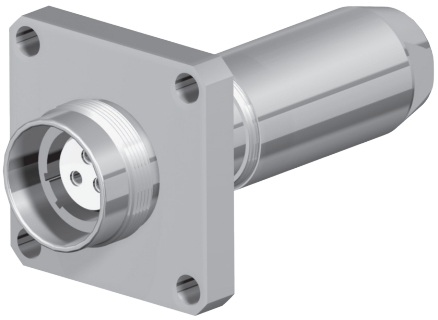

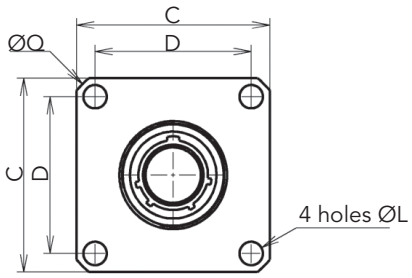


**Panel cut-out**

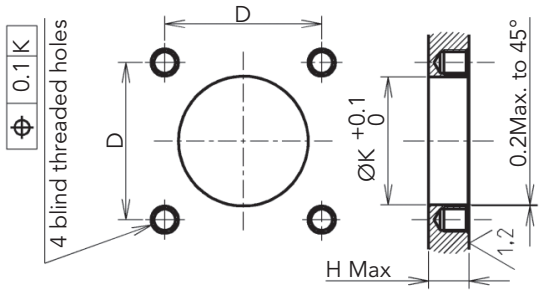


| Shell size | 8TP | 10TP | 14TP | 20TP |
|---|---|---|---|---|
| A | 57 | 82 | 100 | 126 |
| B | 42 | 58 | 76 | 96 |
| C | 32 | 40 | 52 | 76 |
| D | 24 | 31 | 42 | 60 |
| Ø E | M17 x 1 | M21 x 1 | M29 x 1 | M41 x 1 |
| Ø F | 18 | 22 | 29 | 41 |
| G | 83 | 119 | 153 | 198 |
| H Max. | 10 | 12 | 12 | 20 |
| Ø J Max. | 20 | 23 | 32 | 45 |
| Ø J1 Max. | 17 | 20 | 27 | 39 |
| Ø $K^{+/-0.1}$ | 18.2 | 22.2 | 29.2 | 41.2 |
| Ø L | 4.3 | 5.3 | 6.3 | 8.5 |
| P | 4 | 8 | 8 | 9 |
| Ø Q Max. | 42.5 | 53.5 | 70.5 | 100.5 |
| R | M4 | M5 | M6 | M8 |

Note: All dimensions are in millimeters (mm)

# Shell dimensions

## PCE - In-line receptacle

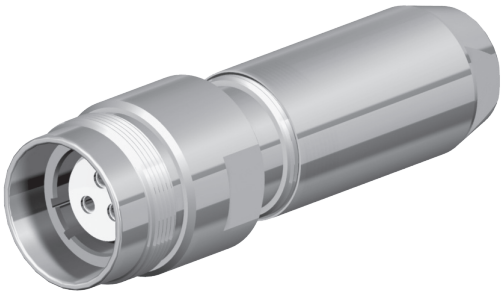

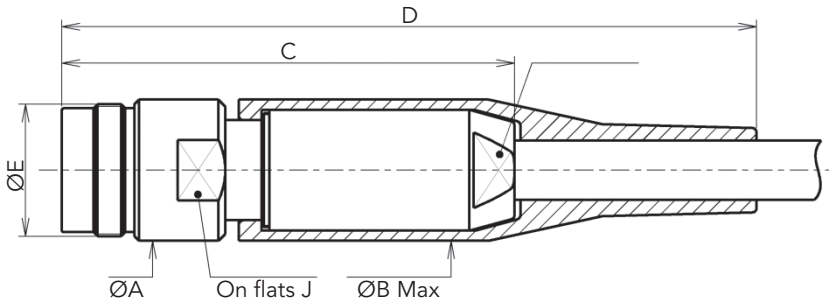


| Shell size | 8TP | 10TP | 14TP | 20TP |
|---|---|---|---|---|
| Ø A | 19 | 23 | 31 | 43 |
| Ø B Max. | 20 | 23 | 32 | 45 |
| C | 57 | 82 | 100 | 126 |
| D | 83 | 119 | 153 | 198 |
| Ø E (ISO) | M17 x 1 | M21 x 1 | M29 x 1 | M41 x 1 |
| On flats J | 17 | 20 | 28 | 38 |
| On flats S | 12 | 16 | 20 | 30 |

Note: All dimensions are in millimeters (mm)

## Shell dimensions

### FED - Straight plug

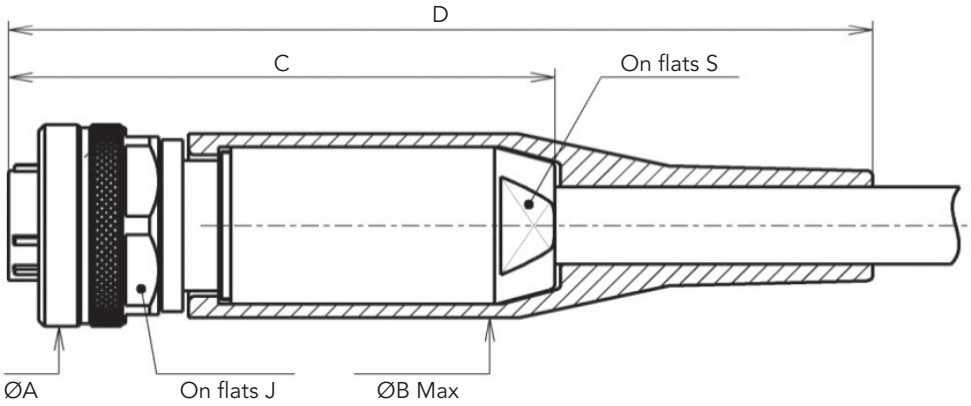


| Shell size | 8TP | 10TP | 14TP | 20TP |
|---|---|---|---|---|
| Ø A | 20 | 25 | 34 | 46 |
| Ø B Max. | 20 | 23 | 32 | 45 |
| C | 53 | 72 | 90 | 114 |
| D | 79 | 110 | 144 | 186 |
| On flats J | 17 | 22 | 30 | 42 |
| On flats S | 12 | 16 | 20 | 30 |

Note: All dimensions are in millimeters (mm)

# Shell dimensions

## Pressure sealing caps

**BEF - Cap for plug**

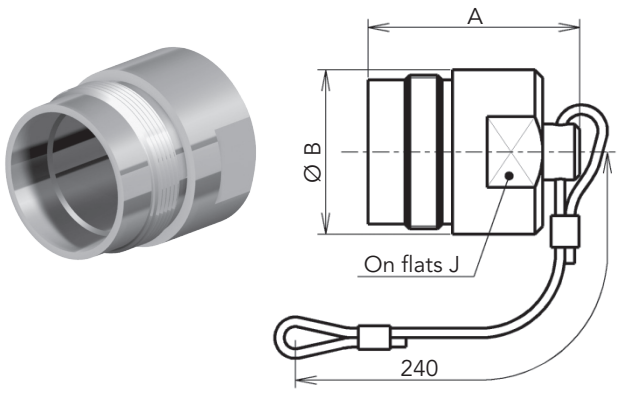


**BER - Cap for receptacle**

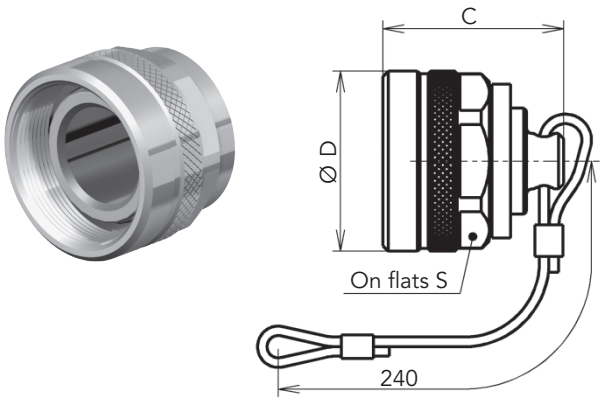


| Shell size | 8TP | 10TP | 14TP | 20TP |
|---|---|---|---|---|
| A | 30 | 39 | 40 | 51 |
| Ø B | 20 | 25 | 34 | 46 |
| C | 27 | 34 | 34 | 48.5 |
| Ø D | 20 | 25 | 34 | 46 |
| On flats J | 17 | 20 | 28 | 38 |
| On flats S | 17,46 | 22 | 30 | 42 |

## Mated/Unmated connectors

**R = Mated shells overlap**

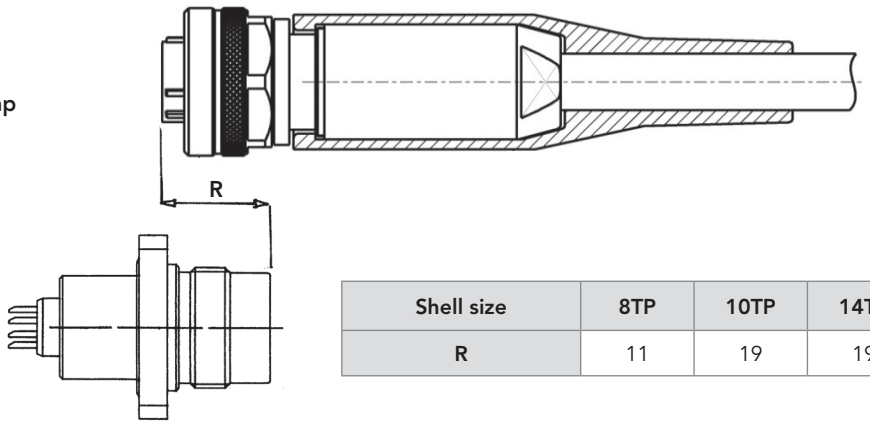


| Shell size | 8TP | 10TP | 14TP | 20TP |
|---|---|---|---|---|
| R | 11 | 19 | 19 | 25 |

Note: All dimensions are in millimeters (mm)

## Insert + Contacts sub assembly part numbers

| Insert + Contacts Sub Assembly | BIS | 14TP | N | 04 12 | M |
|---|---|---|---|---|---|

**Shell type:**
8TP, 10TP, 14TP, 20TP

**Insert material**
**N: Nylatron** (PA6/6+MOS2)
**T: Teflon** (Available on request )

**Contact layouts**
See layout tables pages 19-20

**Type of contacts**
**M:** Male contacts
**F:** Female contacts

## Cable clamp kit part numbers

| | RAE | 14TP | U | 100 |
|---|---|---|---|---|

**Kit type:** See page 21
**RAE:** Full cable clamp kit
**RAER:** Cable clamp kit sub assembly

**Shell size:**
8TP, 10TP, 14TP, 20TP

**Cable clamp**
**U:** With braid or armor termination

**Maximum cable outer diameter** (in tenth of mm, adjusted at upper five tenth). Example: For a 9.2mm outer diameter cable, the code is 095.
**Cable code for coaxial, tri-axial** (consult us for coding)

## O-ring part numbers

| O-ring Type | 8TP | 10TP | 14TP | 20TP |
|---|---|---|---|---|
| ❶ Panel O-ring (for REC-RER) | 09-01 | 10-01 | 14-01 | 20-01 |
| ❷ Insulator/Shell O-ring | 09-02 | 10-02 | 14-02 | 20-02 |
| ❸ Taper seat O-ring | 09-03 | 10-03 | 14-03 | 20-03 |
| ❹ Panel O-ring (for TEC-TER) | 09-04 | 10-04 | 14-04 | 20-04 |
| ❺ Panel O-ring (for RECSC) | 10-01 | 20-02 | 14-05 | 20-04 |

REC-RER Receptacles

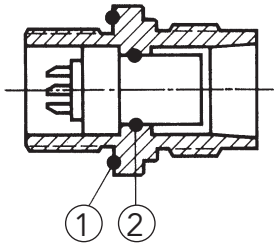


FED Plug

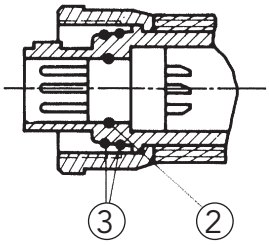


PCE Cable connecting plug

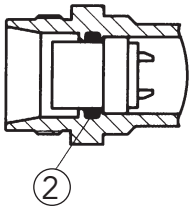


TEC-TER Bulkhead

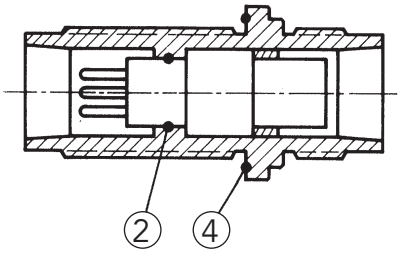


BER Cap

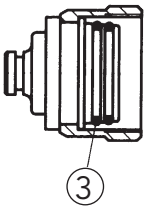


RECSC Square flange in-line receptacle

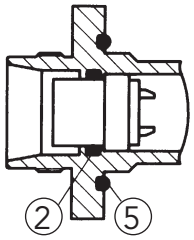

# Tools

## Plug wiring tools

These tools are used to maintain correctly plugs during the final operation of wiring: tightening the tightening sleeve

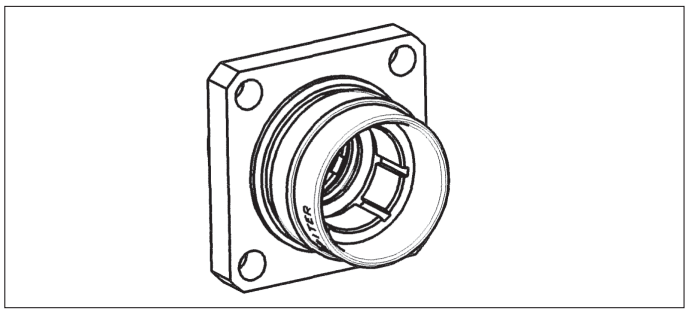

| Plug Size | Tool P/N |
|---|---|
| **8TP** | MA1W6010B5 |
| **10TP** | MA2W6010B5 |
| **14TP** | MA3W6010B5 |
| **20TP** | MA4W6010B5 |

## End wrenches

Used to tighten coupling ring of size 20TP with a torque wrench

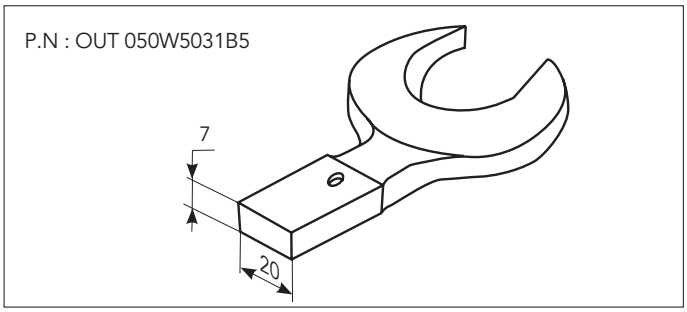


## Plastic jaw plier

This tool is used for holding the cable clamp while tightening the sleeve

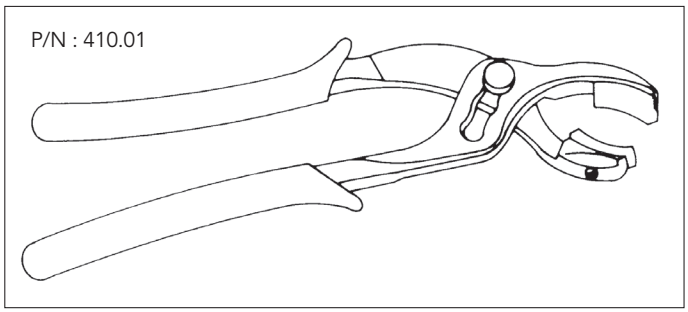


## Potting tool

Used to fill with resin cabling spacers

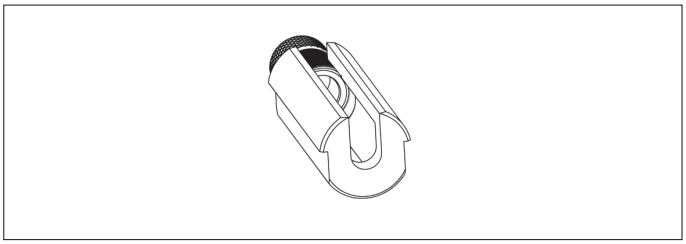

| Size | Tool P/N |
|---|---|
| **10TP** | OUT330 10M |
| **14TP** | OUT330 14M |
| **20TP** | OUT330 20M |

The wiring and installation instruction for TP Series connectors can be provided upon request.

Note: All dimensions are in millimeters (mm)

## Notes

TP SERIES

© 2016 SOURIAU - SOURIAU is a registratred trademark

TP Series

# Other Products


- SWIM Series ..... 36
- M Series ..... 36
- U Series ..... 37
- 8810 Series ..... 37

# Other Series

## SWIM Series
Shallow Water IMmersion

**The cost effective and reliable solution for shallow water immersion in high performance thermoplastic construction.**

**High sealing performances:**
. Down to 300 meters depth

**Large range:**
. 2 sizes: 10PL and 14PL
. Receptacles, plugs and caps
. Signal, power and coax

**RoHS compliant** RoHS

## M Series

**Dry mateable connectors for deep immersion.**
**See specific catalog available online.**

**High sealing performances:**
. Down to 3000 meters depth

**Large range:**
. 5 shell sizes
. Receptacles, cable receptacles, plugs and feedthroughs.
. Signal, power, high voltage, coax and triax contacts

**Robust:**
. High corrosion resistant marine bronze shells
. Robust screw coupling mechanism

**RoHS compliant** RoHS

# Other Series

## U Series

**Connectors similar to M Series with 316L stainless steel shells and FPM seals. See specific catalog.**

**High pressure withstand:**
. Down to 300 meters depth

**Robust:**
. High corrosion resistant stainless steel shell (AISI 316L)
. Robust screw coupling mechanism
. High temperature resistance (up to 170°C with PTFE insulators)
. Nylatron, Teflon or Tefzel insulators
. Radiation withstanding (up to 100 MRads)

**RoHS compliant** RoHS

## 8810 Series

**Wet/underwater mateable connectors for deep immersion. See specific catalog available online.**

**High pressure withstand:**
. Down to 3000 meters depth

**Robust:**
. Marine bronze shells
. Robust screw coupling mechanism

**RoHS compliant** RoHS

## Notes

# Reliable People, Reliable Solutions

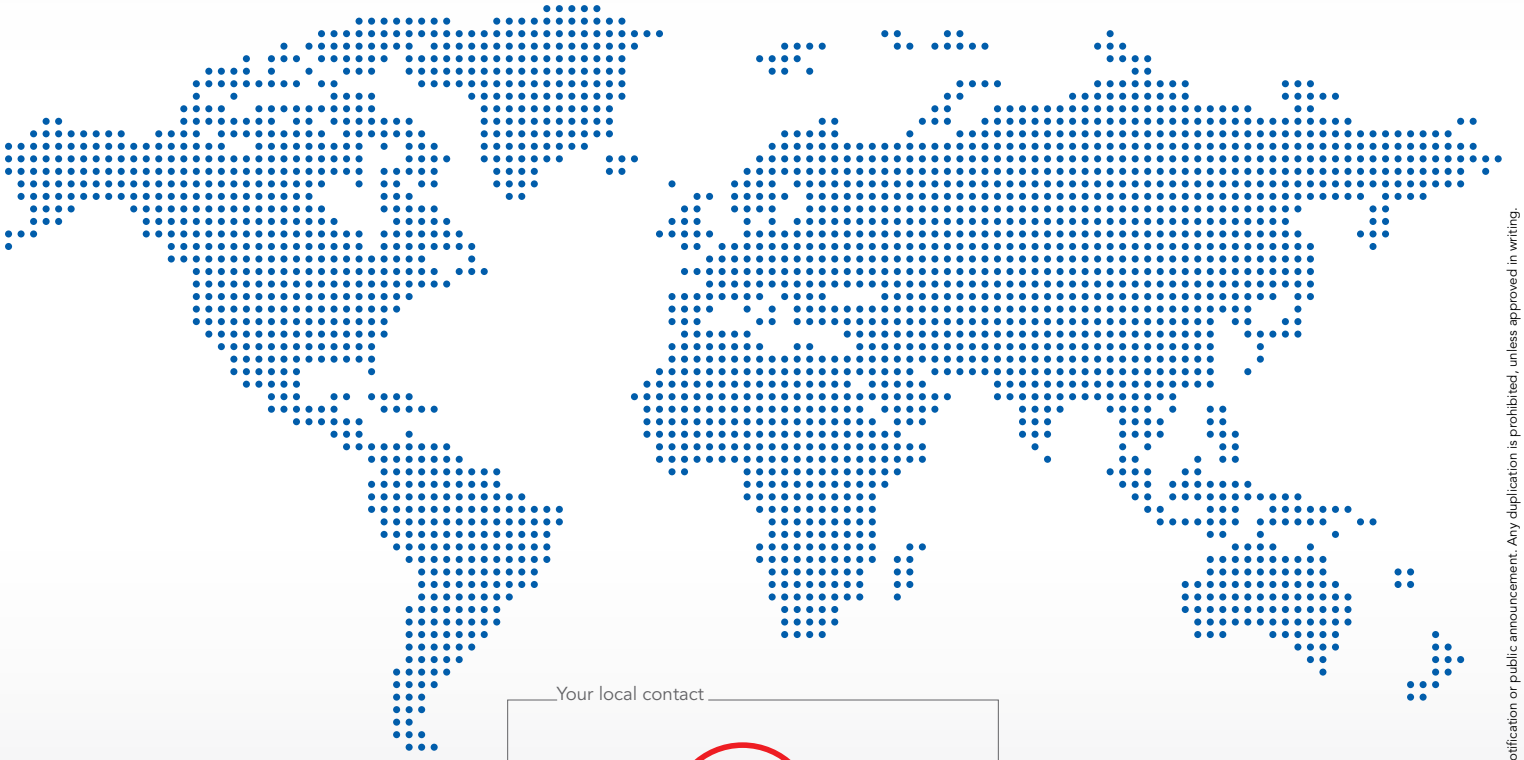

Your local contact

JOWO Systemtechnik AG

Our contribution to environmental protection:
This catalog is printed on PEFC certified paper
Advancement of sustainable wood cultivation. www.pefc.org
PEFC™ 10-31-1299

**Überreicht durch:**
**Offizieller Distributor:**

**JOWO - Systemtechnik AG**
**Lange Wand 12**
**27753 Delmenhorst**
**Deutschland**

**WEB: www.jowo.ag**
**Mail: info@jowo.ag**

**Telefon: +49 4221 - 916495 - 0**

WCATPWUSEN01 © Copyright SOURIAU Spet 2017 - SOURIAU is a registered trademark
All information in this document presents only general particulars and shall not form part of any contract. All rights reserved to SOURIAU for changes without prior notification or public announcement. Any duplication is prohibited, unless approved in writing.