ENGINEERED FIBER OPTIC SOLUTIONS

JOWO Systemtechnik AG

QGrip Breakout Kit

Military Aerospace Shipboard Industrial Mining Transportation Oil & Gas Broadcast Manufacturing Marine Energy Medical

Contents	
Product Introduction	Page 1
Part Number Builder	Page 2 - 3
QGrip Line Drawings	Page 4 - 5
Accessories	Page 6

Official distributor:

JOWO - Systemtechnik AG
Lange Wand 12
27753 Delmenhorst
Deutschland

WEB: www.jowosy.de
Mail: info@jowosy.de

Telefon: +49 (0) 42 21 - 916 495 - 0
Telefax: +49 (0) 42 21 - 916 495 - 59

QGrip Breakout Kit

The QPC QGrip Breakout Kit is a ruggedized solution for terminating jacketed distribution or tactical cables (900µm tight buffered fiber) with up to 24 x ST, SC, LC, or FC connectors. The QGrip features a machined aluminum body with a black anodize finish that can be laser marked with a customer's logo. The furcation legs are individual riser rated 3mm subunits with their own aramid yarn. These legs are color coded and come with a standard length of 36 inches. The QGrip is attached to distribution or tactical cable using a two-piece crimp system designed to capture the strength elements of the cable and is supplied with heat shrink to create a transition to the diameter of the cable. The QGrip's two-piece clamshell design is sealed to IP50 (Dust Protected).

QGrip Breakout Kits are used where jacketed cables need to be directly terminated, particularly in Oil & Gas, Mining, Factory Automation, Heavy Equipment, Broadcast, Medical, Military, Aerospace, and Defense for Communications, Audio / Video, and Sensing Applications.

- 2Ch - 24Ch Ruggedized Cable Furcation Kit
- Body: Black Hard Anodized Machined Aluminum, Designed to Accommodate Various Sizes of Crimp Strain Reliefs
- Legs: 3mm Color-Coded Subunits Designed to Accept 900µm Buffered Fiber
- Cable OD up to 9.5mm
- Cable Retention: 100lbs (Depending on Cable Type)
- Available with Optional Mesh Pulling Sock
- Available with Custom Laser Marking / OEM Private Labeling
- Sealed to IP50

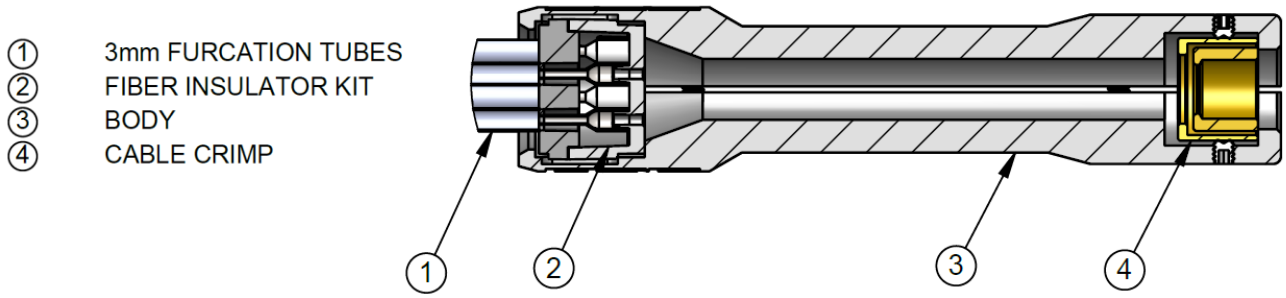

Part Number Builder, Single 2-12CH:

Sample Part Number: QGRIP-3S-2CH-S45-PS	QGRIP	-	3	S	-	02CH	-	S45	-	PS

1 Series
QGRIP

2 Subunit Size
3 - 3mm SUBUNITS WITH 36" LENGTH
(CONSULT QPC FOR OTHER LENGTHS)

3 Subunit Tube Color
S - COLOR CODED
(CONSULT QPC FOR OTHER OPTIONS)

4 Insulator
02 - 2 FIBER INSULATOR KIT
04 - 4 FIBER INSULATOR KIT
06 - 6 FIBER INSULATOR KIT
08 - 8 FIBER INSULATOR KIT
10 - 10 FIBER INSULATOR KIT
12 - 12 FIBER INSULATOR KIT

5 Crimp Support
45 - 3.6mm TO 4.5mm O.D. CABLE
55 - 4.6mm TO 5.5mm O.D. CABLE
65 - 5.6mm TO 6.5mm O.D. CABLE
75 - 6.6mm TO 7.5mm O.D. CABLE
85 - 7.6mm TO 8.5mm O.D. CABLE
95 - 8.6mm TO 9.5mm O.D. CABLE

6 Pulling Sock
OMIT - NO PULLING SOCK
PS - WITH PULLING SOCK

Part Number Builder, Dual 14-24CH:

Sample Part Number: QGRIP-3S-14CH-S45-PS	QGRIP	-	3	S	-	14CH	-	S45	-	PS

1 Series
QGRIP

2 Subunit Size
3 - 3mm SUBUNITS WITH 36" LENGTH
(CONSULT QPC FOR OTHER LENGTHS)

3 Subunit Tube Color
S - COLOR CODED
(CONSULT QPC FOR OTHER OPTIONS)

4 Insulator
14 - 12 & 2 FIBER INSULATOR KIT
16 - 12 & 4 FIBER INSULATOR KIT
18 - 12 & 6 FIBER INSULATOR KIT
20 - 12 & 8 FIBER INSULATOR KIT
22 - 12 & 10 FIBER INSULATOR KIT
24 - 12 & 12 FIBER INSULATOR KIT
(CONSULT QPC FOR OTHER OPTIONS)

5 Crimp Support
45 - 3.6mm TO 4.5mm O.D. CABLE
55 - 4.6mm TO 5.5mm O.D. CABLE
65 - 5.6mm TO 6.5mm O.D. CABLE
75 - 6.6mm TO 7.5mm O.D. CABLE
85 - 7.6mm TO 8.5mm O.D. CABLE
95 - 8.6mm TO 9.5mm O.D. CABLE

6 Pulling Sock
OMIT - NO PULLING SOCK
PS - WITH PULLING SOCK

QGrip, Breakout Kit, Single 2-12CH:

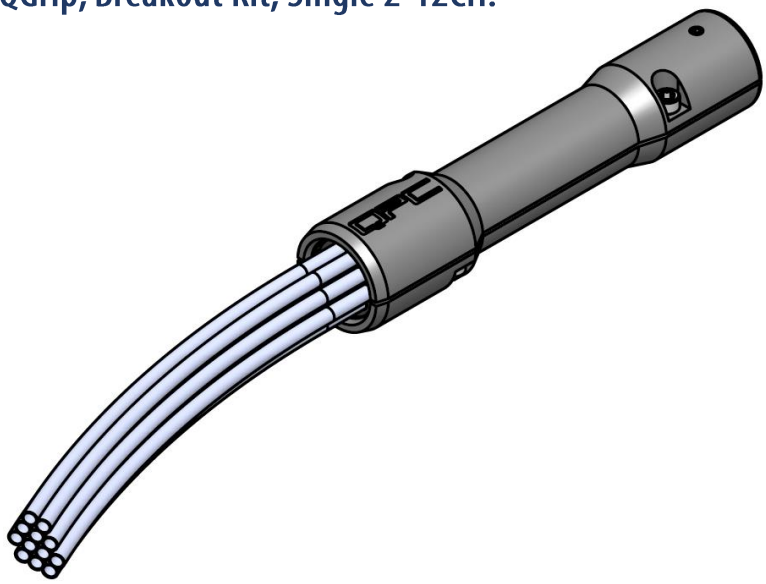

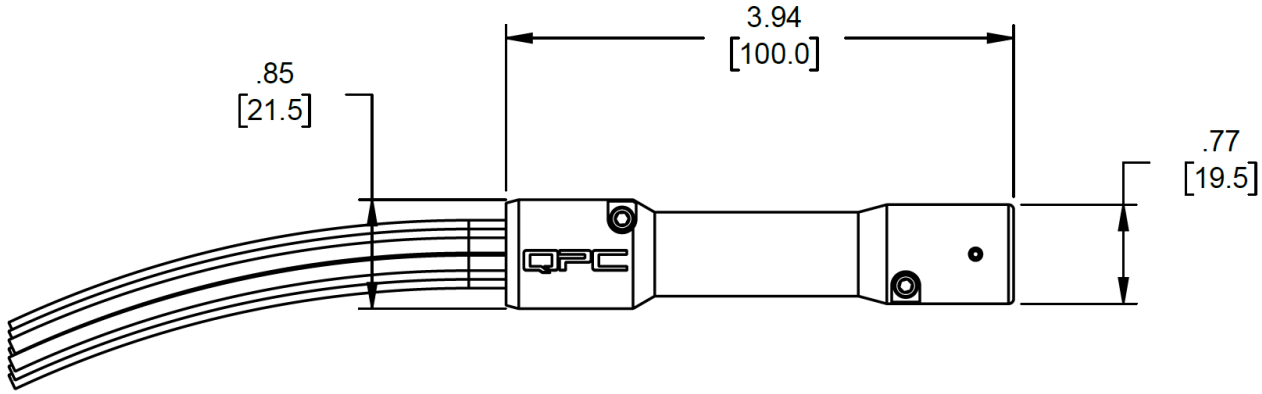

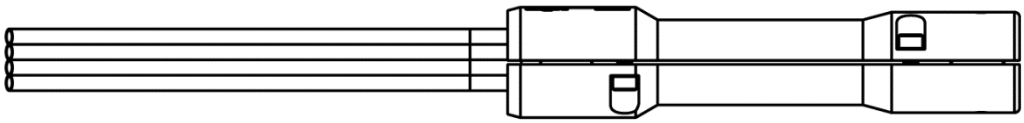

QGrip, Breakout Kit, Dual 14-24CH:

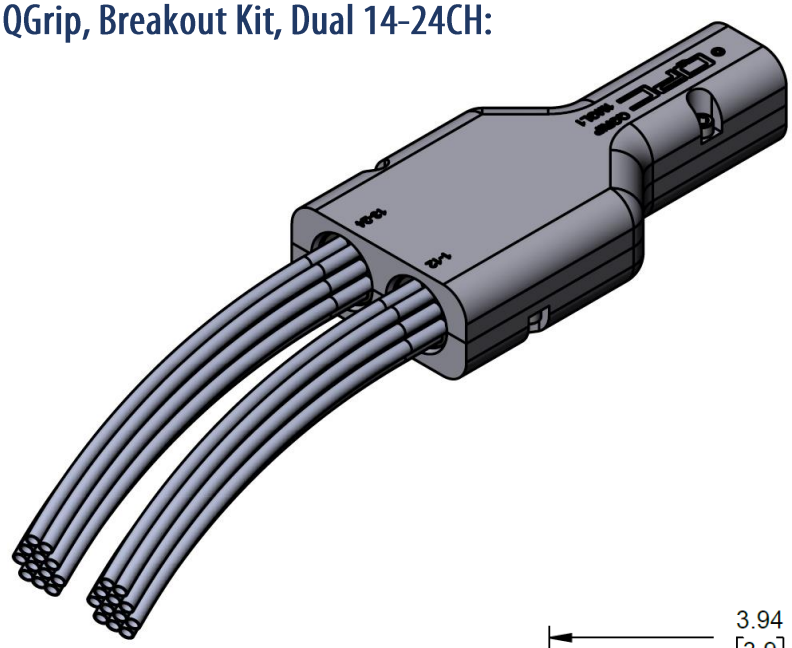

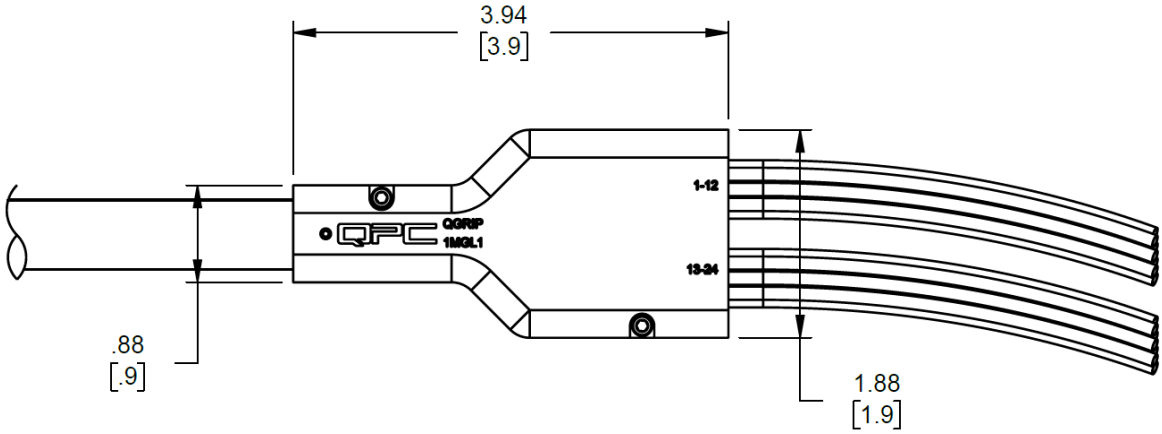

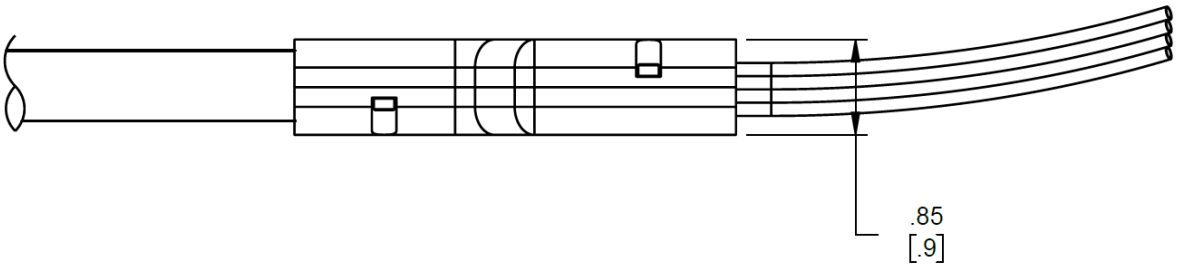

QGrip Tools:

Tool PN	DESCRIPTION
TK-049	QGrip Tool Kit (Includes all items below)
PT-540	Hydraulic Hand Crimper
PT-542	Die Set, 0.475 Hex

Notes & Sketches:

Notes & Sketches:

Notes & Sketches:

ENGINEERED FIBER OPTIC SOLUTIONS

Official distributor:

JOWO - Systemtechnik AG
Lange Wand 12
27753 Delmenhorst
Deutschland

WEB: www.jowosy.de
Mail: info@jowosy.de

Telefon: +49 (0) 42 21 - 916 495 - 0
Telefax: +49 (0) 42 21 - 916 495 - 59

Military Aerospace Shipboard Industrial Mining Transportation Oil & Gas Broadcast Manufacturing Marine Energy Medical