Coordinates for straight PC tail terminations

Viewed from front face of male insulator

Hole sizes: 1mm min. (#22 and #20 contacts) and 1.3mm min. (#16 contact) coordinates in mm.

09 / A

12

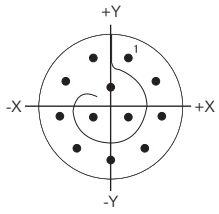

Ctc	X	Y
1	+0.92	+2.54
2	+2.34	+1.35
3	+2.66	-0.47
4	+1.74	-2.07
5	0.00	-2.70
6	-1.74	-2.07

Ctc	X	Y
7	-2.66	-0.47
8	-2.34	+1.35
9	-0.92	+2.54
10	0.00	+1.03
11	+0.89	-0.51
12	-0.89	-0.51

35

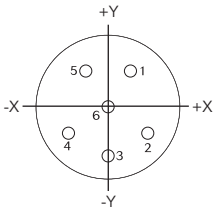

Ctc	X	Y
1	+1.14	+1.98
2	+1.98	-1.14
3	0.00	-2.29
4	-1.98	-1.14
5	-1.14	+1.98
6	0.00	0.00

98

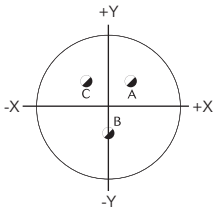

Ctc	X	Y
A	+1.65	+0.97
B	0.00	-1.90
C	-1.65	+0.97

11 / B

02

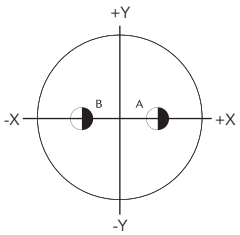

Ctc	X	Y
A	0.00	+2.41
B	0.00	-2.41

04

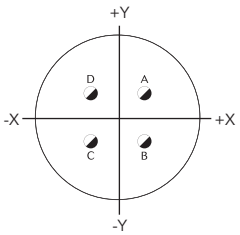

Ctc	X	Y
A	+1.65	+1.65
B	+1.65	-1.65
C	-1.65	-1.65
D	-1.65	+1.65

05

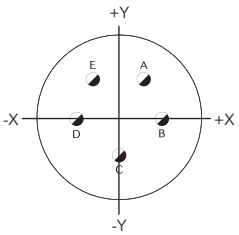

Ctc	X	Y
A	+1.65	+1.42
B	+2.86	-1.65
C	0.00	-3.30
D	-2.86	-1.65
E	-1.65	+1.42

26

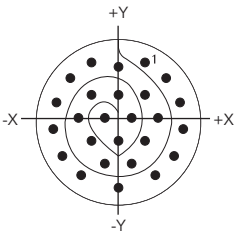

Ctc	X	Y
1	+1.69	+3.79
2	+3.09	+2.77
3	+3.95	+1.28
4	+4.13	-0.44
5	+3.58	-2.10
6	+2.40	-3.37
7	0.00	-4.13
8	-2.40	-3.37
9	-3.58	-2.10
10	-4.13	-0.44
11	-3.95	+1.28
12	-3.09	+2.77
13	-1.69	+3.79

Ctc	X	Y
14	0.00	+3.50
15	+1.70	+1.76
16	+2.55	+0.29
17	+1.70	-1.18
18	+0.85	-2.65
19	-0.85	-2.65
20	-1.70	-1.18
21	-2.55	+0.29
22	-1.70	+1.76
23	0.00	+1.76
24	+0.85	+0.29
25	0.00	-1.18
26	-0.85	+0.29

35

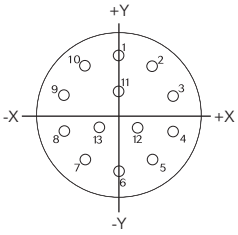

Ctc	X	Y
1	0.00	+3.71
2	+2.16	+3.00
3	+3.51	+1.14
4	+3.51	-1.14
5	+2.16	-3.00

Ctc	X	Y
6	0.00	-3.71
7	-2.16	-3.00
8	-3.51	-1.14
9	-3.51	+1.14

Ctc	X	Y
10	-2.16	+3.00
11	0	+1.42
12	+1.24	-0.89
13	-1.24	-0.89

11 / B

98

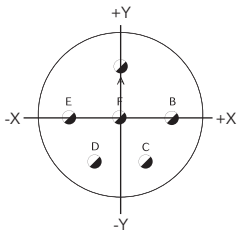

Ctc	X	Y
A	0.00	+3.30
B	+3.30	0.00
C	+1.65	-2.87
D	-1.65	-2.87
E	-3.30	0.00
F	0.00	0.00

99

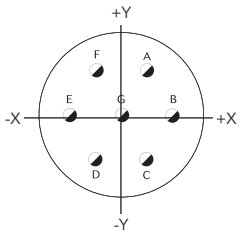

Ctc	X	Y
A	+1.65	+2.85
B	+3.30	0.00
C	+1.65	-2.87
D	-1.65	-2.87
E	-3.30	0.00
F	-1.65	+2.87
G	0.00	0.00

13 / C

04

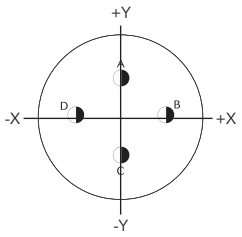

Ctc	X	Y
A	0.00	+3.81
B	+3.71	+0.89
C	0.00	-2.11
D	-3.71	+0.89

08

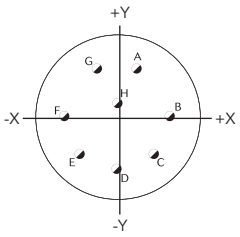

Ctc	X	Y
A	+1.65	+3.99
B	+4.32	0.00
C	+3.05	-3.05
D	0.00	-4.32
E	-3.05	-3.05
F	-4.32	0.00
G	-1.65	+3.99
H	0.00	+1.12

35

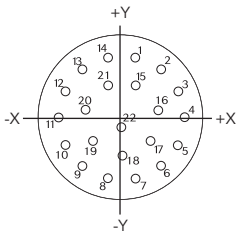

Ctc	X	Y
1	+1.14	+5.00
2	+3.20	+4.01
3	+4.62	+2.24
4	+5.16	0.00
5	+4.62	-2.24
6	+3.20	-4.01
7	+1.14	-5.00
8	-1.14	-5.00
9	-3.20	-4.01
10	-4.62	-2.24
11	-5.16	0.00

Ctc	X	Y
12	-4.62	+2.24
13	-3.20	+4.01
14	-1.14	+5.00
15	+1.14	+2.72
16	+2.97	+0.66
17	+2.36	-1.91
18	0.00	-3.05
19	-2.36	-1.91
20	-2.97	+0.66
21	-1.24	+2.72
22	0.00	-0.76

43

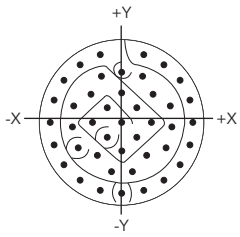

Ctc	X	Y
1	+1.80	+5.54
2	+3.42	+4.71
3	+4.71	+3.42
4	+5.54	+1.80
5	+5.82	0.00
6	+5.54	-1.80
7	+4.71	-3.42
8	+3.42	-4.71
9	+1.80	-5.54
10	0.00	-5.82
11	-1.80	-5.54
12	-3.42	-4.71
13	-4.71	-3.42
14	-5.54	-1.80
15	-5.82	0.00
16	-5.54	+1.80
17	-4.71	+3.42
18	-3.42	+4.71
19	-1.80	+5.54
20	0.00	+4.12
21	+1.68	+3.76
22	+2.54	+2.28

Ctc	X	Y
23	+3.92	+1.27
24	+4.10	-0.43
25	+3.57	-2.06
26	+1.99	-2.74
27	+0.86	-4.03
28	-0.86	-4.03
29	-1.99	-2.74
30	-3.57	-2.06
31	-4.10	-0.43
32	-3.92	+1.27
33	-2.54	+2.28
34	-1.68	+3.76
35	0.00	+2.42
36	+1.21	+1.21
37	+2.42	0.00
38	+1.21	-1.21
39	0.00	-2.42
40	-1.21	-1.21
41	-2.42	0.00
42	-1.21	+1.21
43	0.00	0.00

98

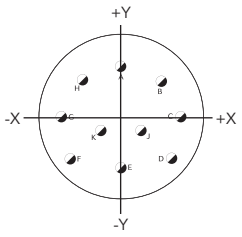

Ctc	X	Y
A	0.00	+4.95
B	+3.18	+3.81
C	+4.90	+0.76
D	+4.17	-2.67
E	0.00	-3.43

Ctc	X	Y
F	-4.17	-2.67
G	-4.90	+0.76
H	-3.18	+3.81
J	+1.65	-0.38
K	-1.65	-0.38

15 / D

05

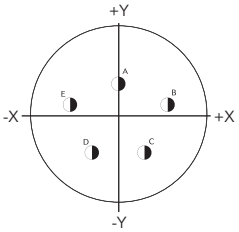

Ctc	X	Y
A	0	+2.54
B	+4.42	+0.61
C	+2.39	+3.76
D	-2.39	-3.76
E	-4.42	+0.61

18

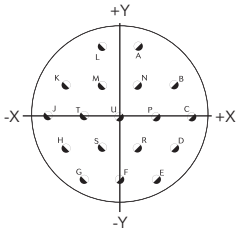

Ctc	X	Y
A	+1.65	+6.40
B	+4.95	+2.87
C	+6.60	0.00
D	+4.95	-2.87
E	+3.30	-5.72
F	0.00	-5.72
G	-3.30	-5.72
H	-4.95	-2.87
J	-6.60	0.00

Ctc	X	Y
K	-4.95	+2.87
L	-1.65	+6.40
M	-1.65	+2.87
N	+1.65	+2.87
P	+3.30	0.00
R	+1.65	-2.87
S	-1.65	-2.87
T	-3.30	0.00
U	0.00	0.00

19

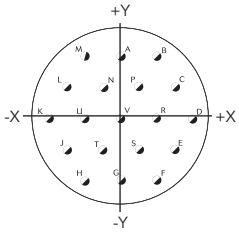

Ctc	X	Y
A	0.00	+5.72
B	+3.30	+5.72
C	+4.95	+2.87
D	+6.60	0.00
E	+4.95	-2.87
F	+3.30	-5.72
G	0.00	-5.72
H	-3.30	-5.72
J	-4.95	-2.87
K	-6.60	0.00

Ctc	X	Y
L	-4.95	+2.87
M	-3.30	+5.72
N	-1.65	+2.87
P	+1.65	+2.87
R	+3.30	0.00
S	+1.65	-2.87
T	-1.65	-2.87
U	-3.30	0.00
V	0.00	0.00

97

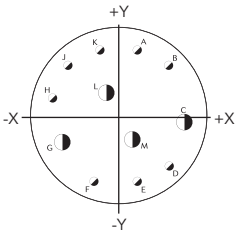

Ctc	X	Y
A	+1.65	+5.94
B	+4.52	+4.52
C	+5.84	-0.58
D	+4.52	-4.52
E	+1.65	-5.94
F	-2.26	-5.97
G	-5.26	-2.41
H	-5.94	+1.65
J	-4.52	+4.52
K	-1.65	+5.94
L	-1.19	+2.06
M	+1.19	-2.06

35

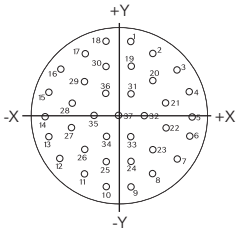

Ctc	X	Y
1	+1.14	+6.65
2	+3.12	+5.51
3	+5.36	+4.06
4	+6.45	+2.03
5	+6.76	-0.25
6	+6.27	-2.49
7	+5.08	-4.45
8	+3.30	-5.89
9	+1.14	-6.65
10	-1.14	-6.65
11	-3.30	-5.89
12	-5.08	-4.45
13	-6.27	-2.49
14	-6.76	-0.25
15	-6.45	+2.03
16	-5.36	+4.06
17	-3.12	+5.51
18	-1.14	+6.65
19	+1.14	+4.37

Ctc	X	Y
20	+3.12	+3.02
21	+4.32	+1.02
22	+4.32	-1.27
23	+3.12	-3.23
24	+1.14	-4.37
25	-1.14	-4.37
26	-3.12	-3.23
27	-4.32	-1.27
28	-4.32	+1.02
29	-3.12	+3.02
30	-1.14	+4.37
31	+1.14	+1.88
32	+2.29	-0.10
33	+1.14	-2.08
34	-1.14	-2.08
35	-2.29	-0.10
36	-1.14	+1.88
37	0.00	-0.10

17 / E

06

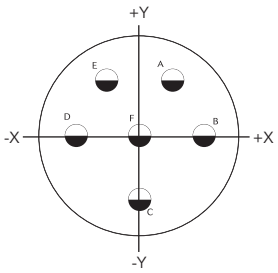

Ctc	X	Y
A	+3.07	+5.31
B	+6.12	0.00
C	0.00	-6.12
D	-6.12	0.00
E	-3.07	+5.31
F	0.00	0.00

08

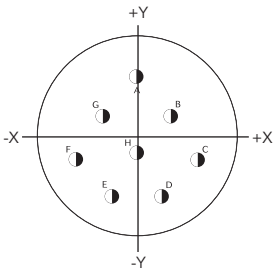

Ctc	X	Y
A	0.00	+5.99
B	+3.25	+2.18
C	+5.84	-1.98
D	+2.39	-5.49
E	-2.39	-5.49
F	-5.84	-1.98
G	-3.25	+2.18
H	0.00	-1.32

26

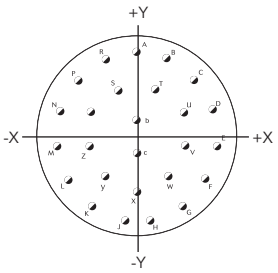

Ctc	X	Y
A	0.00	+8.15
B	+3.33	+7.44
C	+6.07	+5.44
D	+7.75	+2.51
E	+8.10	-0.86
F	+7.06	-4.09
G	+4.80	-6.60
H	+1.70	-7.98

Ctc	X	Y
J	-1.70	-7.98
K	-4.80	-6.60
L	-7.06	-4.09
M	-8.10	-0.86
N	-7.75	+2.51
P	-6.07	+5.44
R	-3.33	+7.44
S	-1.78	+4.50
T	+1.78	+4.50
U	+4.45	+2.39
V	+4.53	-0.91
W	+3.02	-3.84
X	0.00	-5.16
Y	-3.02	-3.84
Z	-4.53	-0.91
a	-4.45	+2.39
b	0.00	+1.65
c	0.00	-1.65

35

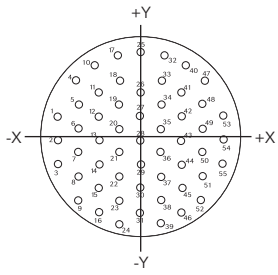

Ctc	X	Y
1	-7.92	+2.18
2	-7.92	-0.10
3	-7.92	-2.39
4	-6.15	+5.61
5	-5.94	+3.33
6	-5.94	+1.04
7	-5.94	-1.24
8	-5.94	-3.53
9	-5.94	-5.82
10	-4.37	+7.09
11	-3.96	+4.47
12	-3.96	+2.18

Ctc	X	Y
13	-3.96	-0.10
14	-3.96	-2.39
15	-3.96	-4.67
16	-3.96	-6.96
17	-2.26	+8.03
18	-1.98	+5.61
19	-1.98	+3.33
20	-1.98	+1.04
21	-1.98	-1.24
22	-1.98	-3.53
23	-1.98	-5.82
24	-1.98	-8.10

Ctc	X	Y
25	0.00	+8.36
26	0.00	+4.47
27	0.00	+2.18
28	0.00	-0.10
29	0.00	-2.39
30	0.00	+4.67
31	0.00	-6.96
32	+2.26	+8.03
33	+1.98	+5.61
34	+1.98	+3.33
35	+1.98	+1.04
36	+1.98	-1.24
37	+1.98	-3.53
38	+1.98	-5.82
39	+1.98	-8.10
40	+4.37	+7.09

Ctc	X	Y
41	+3.96	+4.47
42	+3.96	+2.18
43	+3.96	-0.10
44	+3.96	-2.39
45	+3.96	-4.67
46	+3.96	-6.96
47	+6.15	+5.61
48	+5.94	+3.33
49	+5.94	+1.04
50	+5.94	-1.24
51	+5.94	-3.53
52	+5.94	-5.82
53	+7.92	+2.18
54	+7.92	-0.10
55	+7.92	2-.39

99

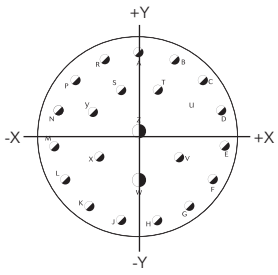

Ctc	X	Y
A	0.00	+8.15
B	+3.33	+7.44
C	+6.07	+5.44
D	+7.75	+2.51
E	+8.10	-0.86
F	+7.06	-4.09
G	+4.80	-6.60
H	+1.70	-7.98
J	-1.70	-7.98
K	-4.80	-6.60
L	-7.06	-4.09
M	-8.10	-0.86

Ctc	X	Y
N	-7.75	+2.51
P	-6.07	+5.44
R	-3.33	+7.44
S	-1.78	+4.50
T	+1.78	+4.50
U	+4.45	+2.39
V	+3.81	-1.91
W	0.00	-4.09
X	-3.81	-1.91
Y	-4.45	+2.39
Z	0.00	+0.64

19 / F

11

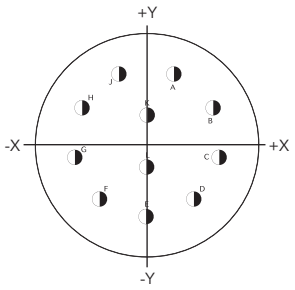

Ctc	X	Y
A	+2.67	+6.60
B	+6.35	+3.35
C	+6.99	-1.35
D	+4.55	-5.46
E	0.00	-7.14
F	-4.55	-5.46
G	-6.99	-1.35
H	-6.35	+3.35
J	-2.67	+6.60
K	0.00	+2.67
L	0.00	-2.34

32

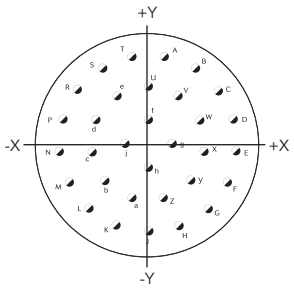

Ctc	X	Y
A	+1.68	+8.97
B	+4.80	+7.75
C	+7.26	+5.51
D	+8.76	+2.49
E	+9.07	-0.84
F	+8.15	-4.06
G	+6.15	-6.73
H	+3.30	-8.51
J	0.00	-9.12
K	-3.30	-8.51
L	-6.15	-6.73
M	-8.15	-4.06
N	-9.07	-0.84
P	-8.76	+2.49
R	-7.26	+5.51
S	-4.80	+7.75

Ctc	X	Y
T	-1.68	+8.97
U	0.00	+5.84
V	+3.15	+4.90
W	+5.31	+2.41
X	+5.79	-0.84
Y	+4.42	-3.84
Z	+1.65	-5.61
a	-1.65	-5.61
b	-4.42	-3.84
c	-5.79	-0.84
d	-5.31	+2.41
e	-3.15	+4.90
f	0.00	+2.44
g	+2.44	0.00
h	0.00	-2.44
j	-2.44	0.00

35

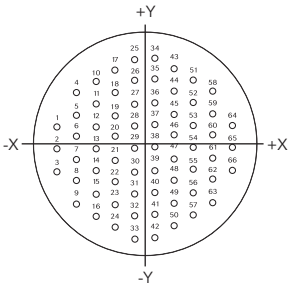

Ctc	X	Y
1	-9.07	+2.29
2	-9.07	0.00
3	-9.07	-2.29
4	-7.09	+5.71
5	-7.09	+3.43
6	-7.09	+1.14
7	-7.09	-1.14
8	-7.09	-3.43
9	-7.09	-5.71
10	-5.11	+6.86
11	-5.11	+4.57
12	-5.11	+2.29
13	-5.11	0.00
14	-5.11	-2.29

Ctc	X	Y
15	-5.11	-4.57
16	-5.11	-6.86
17	-3.12	+8.00
18	-3.12	+5.71
19	-3.12	+3.43
20	-3.12	+1.14
21	-3.12	-1.14
22	-3.12	-3.43
23	-3.12	-5.71
24	-3.12	-8.00
25	-1.14	+9.14
26	-1.14	+6.86
27	-1.14	+4.57

Ctc	X	Y
28	-1.14	+2.29
29	-1.14	0.00
30	-1.14	-2.29
31	-1.14	-4.57
32	-1.14	-6.86
33	-1.14	-9.14
34	+1.14	+9.14
35	+1.14	+6.86
36	+1.14	+4.57
37	+1.14	+2.29
38	+1.14	0.00
39	+1.14	-2.29
40	+1.14	-4.57

Ctc	X	Y
41	+1.14	-6.86
42	+1.14	-9.14
43	+3.12	+8.00
44	+3.12	+5.71
45	+3.12	+3.43
46	+3.12	+1.14
47	+3.12	-1.14
48	+3.12	-3.43
49	+3.12	-5.71
50	+3.12	-8.00
51	+5.11	+6.86
52	+5.11	+4.57
53	+5.11	+2.29

Ctc	X	Y
54	+5.11	0.00
55	+5.11	-2.29
56	+5.11	-4.57
57	+5.11	-6.86
58	+7.09	+5.71
59	+7.09	+3.43
60	+7.09	+1.14
61	+7.09	-1.14
62	+7.09	-3.43
63	+7.09	-5.71
64	+9.07	+2.29
65	+9.07	0.00
66	+9.07	-2.29

21 / G

16

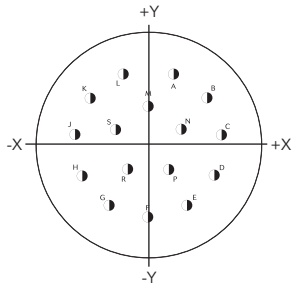

Ctc	X	Y
A	+3.00	+8.18
B	+6.88	+5.36
C	+8.66	+0.91
D	+7.82	-3.81
E	+4.62	-7.37
F	0.00	-8.71
G	-4.62	-7.37
H	-7.82	-3.81

Ctc	X	Y
J	-8.66	+0.91
K	-6.88	+5.36
L	-3.00	+8.18
M	0.00	+4.45
N	+3.91	+1.57
P	+2.39	-3.10
R	-2.39	-3.10
S	-3.91	+1.57

35

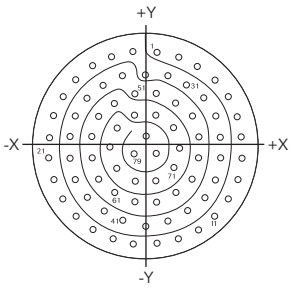

Ctc	X	Y
1	+1.35	+10.82
2	+3.71	+10.26
3	+5.89	+9.19
4	+7.77	+7.67
5	+9.27	+5.77
6	+10.31	+3.58
7	+10.85	+1.22
8	+10.85	-1.22
9	+10.31	-3.58
10	+9.27	-5.77
11	+7.77	-7.67
12	+5.89	-9.19
13	+3.71	-10.26

Ctc	X	Y
14	+1.35	-10.82
15	-1.35	-10.82
16	-3.71	-10.26
17	-5.89	-9.19
18	-7.77	-7.67
19	-9.27	-5.77
20	-10.31	-3.58
21	-10.85	-1.22
22	-10.85	+1.22
23	-10.31	+3.58
24	-9.27	+5.77
25	-7.77	+7.67
26	-5.89	+9.19
27	-3.71	+10.26
28	-1.35	+10.82
29	0.00	+8.20
30	+2.49	+8.18
31	+4.67	+7.11
32	+6.55	+5.59
33	+7.90	+3.58
34	+8.43	+1.22
35	+8.43	-1.22

Ctc	X	Y
36	+7.90	-3.58
37	+6.55	-5.59
38	+4.67	-7.11
39	+2.49	-8.18
40	0.00	-8.81
41	-2.49	-8.18
42	-4.67	-7.11
43	-6.55	-5.59
44	-7.90	-3.58
45	-8.43	-1.22
46	-8.43	+1.22
47	-7.90	+3.58
48	-6.55	+5.59
49	-4.67	+7.11
50	-2.49	+8.18
51	-1.22	+6.12
52	+1.22	+6.12
53	+3.40	+5.05
54	+5.28	+3.53
55	+6.02	+1.22
56	+6.02	-1.22
57	+5.28	-3.53

Ctc	X	Y
58	+3.40	-5.05
59	+1.22	-6.12
60	-1.22	-6.12
61	-3.40	-5.05
62	-5.28	-3.53
63	-6.02	-1.22
64	-6.02	+1.22
65	-5.28	+3.53
66	-3.40	+5.05
67	-1.22	+3.71
68	+1.22	+3.71
69	+3.18	+2.29
70	+3.94	0.00
71	+3.18	-2.29
72	+1.22	-3.71
73	-1.22	-3.71
74	-3.18	-2.29
75	-3.94	0.00
76	-3.18	+2.29
77	0.00	+1.35
78	+1.22	-0.74
79	-1.22	-0.74

39

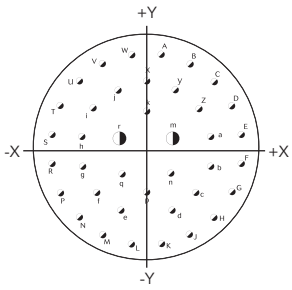

Ctc	X	Y
A	+1.65	+10.44
B	+4.80	+9.42
C	+7.47	+7.47
D	+9.42	+4.80
E	+10.44	+1.65
F	+10.44	-1.65
G	+9.42	-4.80
H	+7.47	-7.47
J	+4.80	-9.42
K	+1.65	-10.44
L	-1.65	-10.44
M	-4.80	-9.42
N	-7.47	-7.47

Ctc	X	Y
P	-9.42	-4.80
R	-10.44	-1.65
S	-10.44	+1.65
T	-9.42	+4.80
U	-7.47	+7.47
V	-4.80	+9.42
W	-1.65	+10.44
X	0.00	+7.49
Y	+3.20	+6.50
Z	+5.89	+4.55
a	+7.11	+1.45
b	+7.11	-1.88
c	+5.51	-4.80

Ctc	X	Y
d	+2.84	-6.73
e	-2.84	-6.73
f	-5.51	-4.80
g	-7.11	-1.88
h	-7.11	+1.45
i	-5.89	+4.55
j	-3.20	+6.50
k	0.00	+4.17
m	+2.90	+1.22
n	+2.69	-2.72
p	0.00	-4.80
q	-2.69	-2.72
r	-2.90	+1.22

41

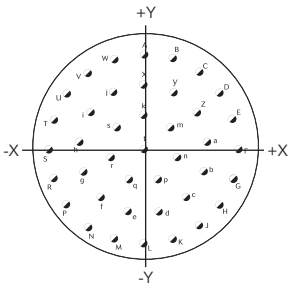

Ctc	X	Y
A	0.00	+10.60
B	+3.28	+10.09
C	+6.23	+8.58
D	+8.58	+6.23
E	+10.09	+3.28
F	+10.60	0.00
G	+10.09	-3.28
H	+8.58	-6.23
J	+6.23	-8.58
K	+3.28	-10.09
L	0.00	-10.60

Ctc	X	Y
M	-3.26	-10.09
N	-6.23	-8.58
P	-8.58	-6.23
R	-10.09	-3.28
S	-10.60	0.00
T	-10.09	+3.28
U	-8.58	+6.23
V	-6.23	+8.58
W	-3.28	+10.09
X	0.00	+7.20
Y	+3.35	+6.38

Ctc	X	Y
Z	+5.92	+4.09
a	+7.15	+0.87
b	+6.73	-2.55
c	+4.78	-5.39
d	+1.73	-6.99
e	-1.73	-6.99
f	-4.78	-5.39
g	-6.73	-2.55
h	-7.15	+0.87
i	-5.92	+4.09
j	-3.35	+6.38
k	0.00	+3.81
m	+2.98	+2.38
n	+3.71	-0.85
p	+1.66	-3.43
q	-1.66	-3.43
r	-3.71	-0.85
s	-2.98	+2.38
t	0.00	0.00

23 / H

21

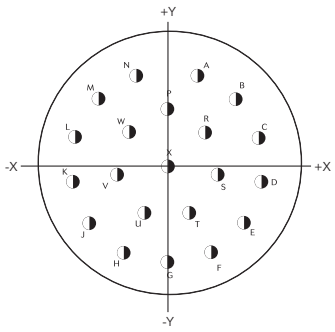

Ctc	X	Y
A	+3.25	+9.78
B	+7.34	+7.24
C	+9.80	+3.12
D	+10.16	-1.65
E	+8.33	-6.07
F	+4.65	-9.19
G	0.00	-10.31
H	-4.65	-9.19
J	-8.33	-6.07
K	-10.16	-1.65
L	-9.80	+3.12
M	-7.34	+7.24
N	-3.25	+9.78
P	0.00	+6.22
R	+4.06	+3.71
S	+5.44	-0.89
T	+2.39	-4.93
U	-2.39	-4.93
V	-5.44	-0.89
W	-4.06	+3.71
X	0.00	0.00

53

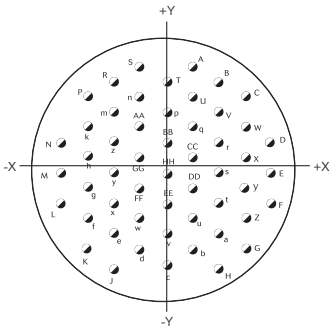

Ctc	X	Y
A	+2.84	+11.56
B	+5.72	+9.91
C	+8.53	+8.26
D	+11.43	+3.30
E	+11.43	0.00
F	+11.43	-3.30

Ctc	X	Y
G	+8.53	-8.26
H	+5.72	-10.41
J	-5.72	-10.41
K	-8.53	-8.26
L	-11.43	-3.30
M	-11.43	0.00

Ctc	X	Y
N	-11.43	+3.30
P	-8.53	+8.26
R	-5.72	+9.91
S	-2.84	+11.56
T	0.00	+9.91
U	+2.84	+8.26
V	+5.72	+6.60
W	+8.53	+4.95
X	+8.53	+1.65
Y	+8.53	-1.65
Z	+8.53	-4.95
a	+5.72	-6.60
b	+2.84	-8.26
c	0.00	-9.91
d	-2.84	-8.26
e	-5.72	-6.60
f	-8.53	-4.95
g	-8.53	-1.65
h	-8.53	+1.65
k	-8.53	+4.95

Ctc	X	Y
m	-5.72	+6.60
n	-2.84	+8.26
p	0.00	+6.60
q	+2.84	+4.95
r	+5.72	+3.30
s	+5.72	0.00
t	+5.72	-3.30
u	+2.84	-4.95
v	0.00	-6.60
w	-2.84	-4.95
x	-5.72	-3.30
y	-5.72	0.00
z	-5.72	+3.30
AA	-2.84	+4.95
BB	0.00	+3.30
CC	+2.84	+1.65
DD	+2.84	-1.65
EE	0.00	-3.30
FF	-2.84	-1.65
GG	-2.84	+1.65
HH	0.00	0.00

25 / J

04

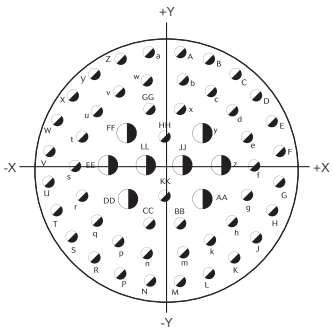

Ctc	X	Y
A	+1.75	+13.49
B	+5.16	+12.57
C	+8.23	+10.80
D	+10.77	+8.28
E	+12.52	+5.21
F	+13.49	+1.75
G	+13.49	-1.75

Ctc	X	Y
H	+12.52	-5.21
J	+10.77	-8.28
K	+8.23	-10.80
L	+5.16	-12.57
M	+1.75	-13.49
N	-1.75	-13.49
P	-5.16	-12.57

Ctc	X	Y
R	-8.23	-10.80
S	-10.77	-8.28
T	-12.52	-5.21
U	-13.49	-1.75
V	-13.49	+1.75
W	-12.52	+5.21
X	-10.77	+8.28
Y	-8.23	+10.80
Z	-5.16	+12.57
a	-1.75	+13.49
b	+2.18	+10.08
c	+5.38	+8.78
d	+7.90	+6.38
e	+9.58	+3.35
f	+10.46	0.00
g	+9.58	-3.35
h	+7.90	-6.38
k	+5.38	-8.78
m	+2.18	-10.08
n	-2.18	-10.08
p	-5.38	-8.78

Ctc	X	Y
q	-7.90	-6.38
r	-9.58	-3.35
s	-10.46	0.00
t	-9.58	+3.35
u	-7.90	+6.38
v	-5.38	+8.78
w	-2.18	+10.08
x	+1.75	+6.66
y	+4.37	+3.78
z	+6.55	0.00
AA	+4.37	-3.78
BB	+1.75	-6.66
CC	-1.75	-6.66
DD	-4.37	-3.78
EE	-6.55	0.00
FF	-4.37	-3.78
GG	-1.75	-6.66
HH	0.00	+3.35
JJ	+2.18	0.00
KK	0.00	-3.35
LL	-2.18	0.00

29

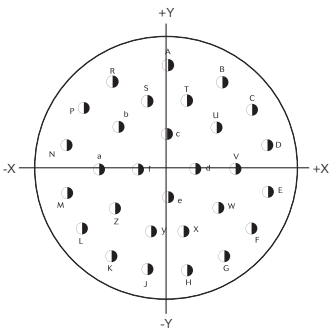

Ctc	X	Y
A	0.00	+12.22
B	+6.55	+10.31
C	+10.03	+7.04
D	+11.91	+2.77
E	+11.91	-2.77
F	+10.03	-7.04
G	+6.68	-10.31
H	+2.31	-11.99

Ctc	X	Y
J	-2.31	-11.99
K	-6.68	-10.31
L	-10.03	-7.04
M	-11.91	-2.77
N	-11.91	+2.77
P	-10.03	+7.04
R	-6.55	+10.31
S	-2.31	+8.15
T	+2.31	+8.15
U	+5.79	+4.93
V	+8.10	0.00
W	+6.10	-4.60
X	+2.31	-7.37
Y	-2.31	-7.37
Z	-6.10	-4.60
a	-8.10	0.00
b	-5.79	+4.93
c	0.00	+4.09
d	+3.40	0.00
e	0.00	-3.30
f	-3.40	0.00

25 / J

35

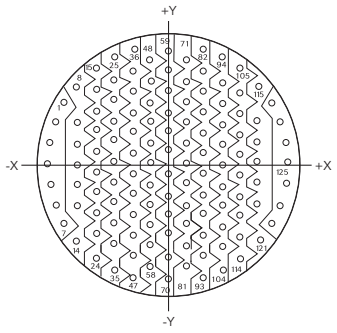

Ctc	X	Y
1	-12.17	+7.09
2	-13.21	+4.83
3	-13.87	+2.41
4	-14.10	0.00
5	-13.87	-2.41
6	-13.21	-4.83
7	-12.17	-7.09
8	-10.77	+9.07
9	-10.54	+4.83
10	-10.54	+2.41
11	-10.54	0.00
12	-10.54	-2.41
13	-10.54	-4.83
14	-10.77	-9.07
15	-8.43	+11.28
16	-8.43	+8.43
17	-8.43	+6.02
18	-8.43	+3.61
19	-8.43	+1.19
20	-8.43	-1.19
21	-8.43	-3.61
22	-8.43	-6.02
23	-8.43	-8.43
24	-8.43	-10.85
25	-6.32	+12.60
26	-6.32	+9.65
27	-6.32	+7.24
28	-6.32	+4.83
29	-6.32	+2.41
30	-6.32	0.00
31	-6.32	-2.41
32	-6.32	-4.83
33	-6.32	-7.24
34	-6.32	-9.65
35	-6.32	-12.07
36	-4.06	+13.49
37	-4.22	+10.85
38	-4.22	+8.43
39	-4.22	+6.02
40	-4.22	+3.61
41	-4.22	+1.19
42	-4.22	-1.19
43	-4.22	-3.61
44	-4.22	-6.02
45	-4.22	-8.43
46	-4.22	-10.85
47	-4.22	-13.26
48	-2.11	+12.07
49	-2.11	+9.65
50	-2.11	+7.24
51	-2.11	+4.83
52	-2.11	+2.41
53	-2.11	0.00
54	-2.11	-2.41
55	-2.11	-4.83
56	-2.11	-7.24
57	-2.11	-9.65
58	-2.11	-12.07
59	0.00	+13.26
60	0.00	+10.85
61	0.00	+8.43
62	0.00	+6.02
63	0.00	+3.61
64	0.00	+1.19
65	0.00	-1.19
66	0.00	-3.61
67	0.00	-6.02
68	0.00	-8.43
69	0.00	-10.85
70	0.00	-14.10
71	+2.11	+12.07
72	+2.11	+9.65
73	+2.11	+7.24
74	+2.11	+4.83
75	+2.11	+2.41
76	+2.11	0.00
77	+2.11	-2.41
78	+2.11	-4.83
79	+2.11	-7.24
80	+2.11	-9.65
81	+2.11	-12.07
82	+4.06	+13.49
83	+4.22	+10.85
84	+4.22	+8.43
85	+4.22	+6.02
86	+4.22	+3.61
87	+4.22	+1.19
88	+4.22	-1.19
89	+4.22	-3.61
90	+4.22	-6.02
91	+4.22	-8.43
92	+4.22	-10.85
93	+4.22	-13.26
94	+6.32	+12.60
95	+6.32	+9.65
96	+6.32	+7.24
97	+6.32	+4.83
98	+6.32	+2.41
99	+6.32	0.00
100	+6.32	-2.41
101	+6.32	-4.83
102	+6.32	-7.24
103	+6.32	-9.65
104	+6.32	-12.07
105	+8.43	+11.28
106	+8.43	+8.43
107	+8.43	+6.02
108	+8.43	+3.61
109	+8.43	+1.19
110	+8.43	-1.19
111	+8.43	-3.61
112	+8.43	-6.02
113	+8.43	-8.43
114	+8.43	-10.85
115	+10.77	+9.07
116	+10.54	+4.83
117	+10.54	+2.41
118	+10.54	0.00
119	+10.54	-2.41
120	+10.54	-4.83
121	+10.77	-9.07
122	+12.17	+7.09
123	+13.21	+4.83
124	+13.87	+2.41
125	+14.10	0.00
126	+13.87	-2.41
127	+13.21	-4.83
128	+12.17	-7.09

43

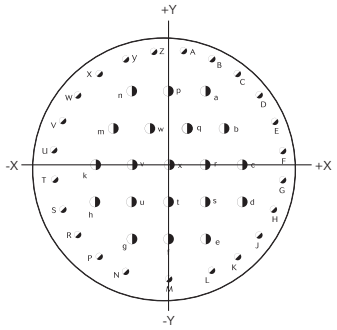

Ctc	X	Y
A	+1.75	+13.49
B	+5.16	+12.57
C	+8.23	+10.80
D	+10.77	+8.28
E	+12.52	+5.21
F	+13.49	+1.75
G	+13.49	-1.75
H	+12.52	-5.21
J	+10.77	-8.28
K	+8.23	-10.80
L	+5.16	-12.57
M	0.00	-13.49
N	-5.16	-12.57
P	-8.23	-10.80
R	-10.77	-8.28
S	-12.52	-5.21
T	-13.49	-1.75
U	-13.49	+1.75
V	-12.52	+5.21
W	-10.77	+8.28
X	-8.23	+10.80
Y	-5.16	+12.57
Z	-1.75	+13.4
a	+4.37	+8.74
b	+6.55	+4.37
c	+8.74	0.00
d	+8.74	-4.37
e	+4.37	-8.74
f	0.00	-8.74
g	-4.37	-8.74
h	-8.74	-4.37
k	-8.74	0.00
m	-6.55	+4.37
n	-4.37	+8.74
p	0.00	+8.74
q	+2.18	+4.37
r	+4.37	0.00
s	+4.37	-4.37
t	0.00	-4.37
u	-4.37	-4.37
v	-4.37	0.00
w	-2.18	+4.37
x	0.00	0.00

61

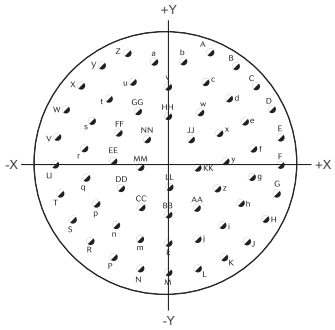

Ctc	X	Y
A	+4.98	+12.70
B	+7.98	+11.05
C	+10.49	+8.71
D	+12.32	+5.84
E	+13.39	+2.57
F	+13.61	-0.76
G	+12.98	-4.17
H	+11.53	-7.29
J	+9.35	-9.93
K	+6.58	-11.94
L	+3.40	-13.18
M	0.00	-13.64
N	-3.40	-13.18
P	-6.58	-11.94
R	-9.35	-9.93
S	-11.53	-7.29
T	-12.98	-4.17
U	-13.61	-0.76
V	-13.39	+2.57
W	-12.32	+5.84
X	-10.49	+8.71
Y	-7.98	-11.05
Z	-4.98	+12.10
a	-1.73	+11.53
b	+1.73	+11.53
c	+4.39	+9.22
d	+7.24	+7.19
e	+9.19	+4.45
f	+10.13	+1.17
g	+9.96	-2.24
h	+8.66	-5.41
i	+6.38	-7.98
j	+3.38	-9.63
k	0.00	-10.21
m	-3.38	-9.63
n	-6.38	-7.98
p	-8.66	-5.41
q	-9.96	-2.24
r	-10.13	+1.17
s	-9.19	+4.45
t	-7.24	+7.19
u	-4.39	+9.22
v	0.00	+8.59
w	+3.73	+5.66
x	+6.02	+3.10
y	+6.78	-0.25
z	+5.79	-3.53
AA	+3.33	-5.92
BB	0.00	-6.78
CC	-3.33	-5.92
DD	-5.79	-3.53
EE	-6.78	-0.25
FF	-6.02	+3.10
GG	-3.73	+5.66
HH	0.00	+5.08
JJ	+2.67	+2.39
KK	+3.43	-1.04
LL	0.00	-3.35
MM	-3.43	-1.04
NN	-2.67	+2.39
PP	0.00	0.00

8D SERIES

© 2019 SOURIAU - SOURIAU is a registered trademark

8D Series

Derived Series

High speed solutions:
- Twinax and Quadrax contacts 86
- BMA coaxial contacts 92
- ELIO® fiber optic contacts 96
- ELIOBEAM fiber optic contacts 102

Power solutions:
- Power contacts 106
- High power contacts 111

Compact solutions:
- High density 116
- Plug with integrated backshell 118

Smart design solutions:
- High vibration plug: 8DV Series 122
- Receptacle with clinch nuts or helicoils 126

PC tail contacts solutions:
- Double flange receptacle 129
- PCB contacts without shoulder 132

Reinforced sealing:
- Resin sealed connector 134
- Glass sealed connector 137

Description

- Front and rear removable versions available
- Twinax: crimp version available
- Quadrax: crimp and PC tail versions available
- Standard #8 cavity insertion and removal tools
- Ground connection of the cable braid to the shell possible through the external shell of the #8 contact
- Compatible with star quad cable
- Characteristic impedance of 100 Ohms
- Mixed layouts not grounded

Technical features

Mechanical

- **Operating temperature:**
  -65°C up to 150°C
- **Inner contact:**
  copper alloy
- **Contact body**:
  copper alloy
- **Contact insulator:**
  thermoplastic resin
- **Contact plating:**
  gold over nickel
- **Shell plating:**
  . Aluminum shell:
  Cadmium olive drab (W)
  Nickel (F)
  Black zinc nickel (Z)
  Green zinc cobalt (ZC)
  . Composite shell:
  Cadmium olive drab (J)
  Nickel (M)
  Without plating (X)
  . Stainless steel shell:
  Passivated (K)
  Nickel (S)
  . Titanium shell:
  Without plating (TT)
  Nickel (TF)
  . Bronze shell:
  Without plating

Electrical

- **ISO/IEC 11801 category 6 compliant:**
  . Next (cross talk): > 46 db at 250 MHz
  . Return loss: > 16 db at 250 MHz
  . Shield effectiveness: > 36 db at 80 MHz
- **Contact to shell continuity:**
  < 10 mΩ
- **Contact resistance (low level):**
  . Initial 15 mΩ
  . After tests 30 mΩ
- **Dielectric withstanding voltage:**

Altitude	Service I
sea level	500 Vrms
21 000 m	125 Vrms

- **Insulation resistance:**
  . At ambient temperature: > 5000 MΩ
  . At high temperature: > 1000 MΩ
- **#24 contact cable size acceptance:**
  AWG 22 to AWG 26

Next (dB)

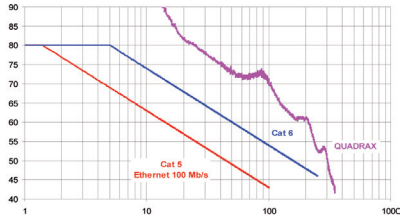

Return loss (dB)

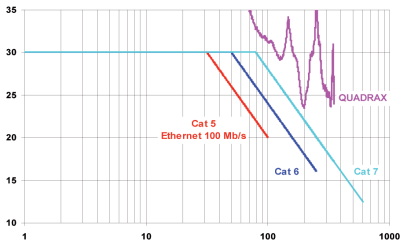

Shield effectiveness (dB)

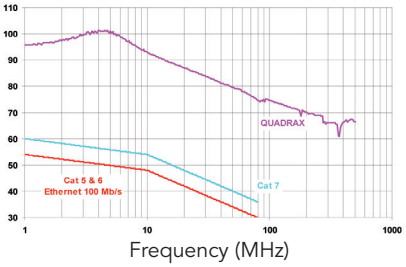

Contact layouts

Contact #22D
Contact #12
Contact #20
Contact #8, Twinax or Quadrax
Contact #16

09

05*

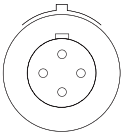

1#8

11

81

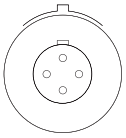

1#8

17

80

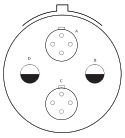

2#12
2#8

81

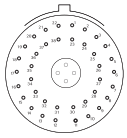

38#22D
1#8

82

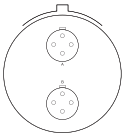

2#8

19

84

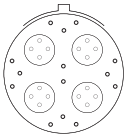

14#22D
4#8

21

78

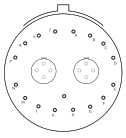

17#22D
2#8

80

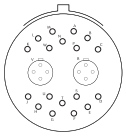

18#20
2#8

84

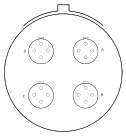

4#8

23

86

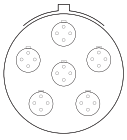

6#8

25

80

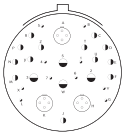

10#20, 13#16
4#12, 3#8

81

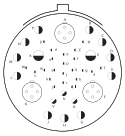

22#22D
3#20, 11#16
2#12, 3#8

82

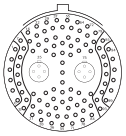

97#22D
2#8

86

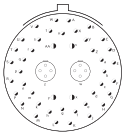

40#20, 4#16
2#8

87

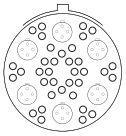

36#22D
6#8

88

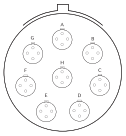

8#8

* 09-05 layout with twinax or quadrax contact:
- grounded version only
- plug with female contact & receptacle with male contact only

Note: Mixed layouts not grounded.

Ordering information

Aluminum, Composite, Stainless steel & Titanium connector

Basic Series	8D	0	Q	11	W	81	P	N	284	L

Shell style:
- **0:** Square flange receptacle
- **5:** Plug
- **7:** Jam nut receptacle

Type:
- **C:** Quadrax PC tail contacts*
- **Q:** Quadrax crimp contacts

Shell size: 9 - 11 - 17 - 19 - 21 - 23 - 25 (see next page)

Plating:

Aluminum shell:
- **W:** Olive green cadmium
- **F:** Nickel
- **Z:** Black zinc nickel
- **ZC:** Green zinc cobalt

Stainless steel shell:
- **K:** Passivated
- **S:** Nickel

Composite shell:
- **J:** Olive green cadmium
- **M:** Nickel
- **X:** Without plating

Titanium shell:
- **TF:** Nickel
- **TT:** Without plating

Contact layout: See previous page

Contact type:
- **P:** Pin
- **S:** Socket

Orientation: N, A, B, C, D & E

Specification:
- **284:** Quadrax grounded PC tail contact (100Ω)*
- **308:** Quadrax not grounded PC tail contact (100Ω)
- **384:** Quadrax grounded crimp contact (150Ω)*
- **408:** Quadrax not grounded crimp contact (150Ω)
- **620:** Quadrax grounded crimp contact (100Ω)*
- **621:** Quadrax not grounded crimp contact (100Ω)
- **550:** Tin plated Quadrax not grounded PCB contact SnPb
- **550S:** Tin plated Quadrax not grounded PCB contact SAC305
- **550E:** Tin plated Quadrax not grounded PCB contact Sn pur

L: For P or S contact type only, connectors delivered without contacts, connectors marking P or S plus orientation

Bronze connector

Basic Series	JVS	00A	C	09	35	P	N	284	L

Shell style:
- **00A:** Square flange receptacle
- **16A:** Plug
- **07A:** Jam nut receptacle

Type:
- **C:** Quadrax PC tail contacts*
- **Q:** Quadrax crimp contacts

Shell size: 9 - 11 - 17 - 19 - 21 - 23 - 25 (see next page)

Contact layout: See previous page

Contact type:
- **P:** Pin
- **S:** Socket

Orientation: N, A, B, C, D & E

Specification:
- **284:** Quadrax grounded PC tail contact (100Ω)*
- **308:** Quadrax not grounded PC tail contact (100Ω)
- **384:** Quadrax grounded crimp contact (150Ω)*
- **408:** Quadrax not grounded crimp contact (150Ω)
- **620:** Quadrax grounded crimp contact (100Ω)*
- **621:** Quadrax not grounded crimp contact (100Ω)
- **550:** Tin plated Quadrax not grounded PCB contact SnPb
- **550S:** Tin plated Quadrax not grounded PCB contact SAC305
- **550E:** Tin plated Quadrax not grounded PCB contact Sn pur

L: For P or S contact type only, connectors delivered without contacts, connectors marking P or S plus orientation

* For PC tail contacts or grounded versions please consult us.

Dimensions

Square flange receptacle - Type 0

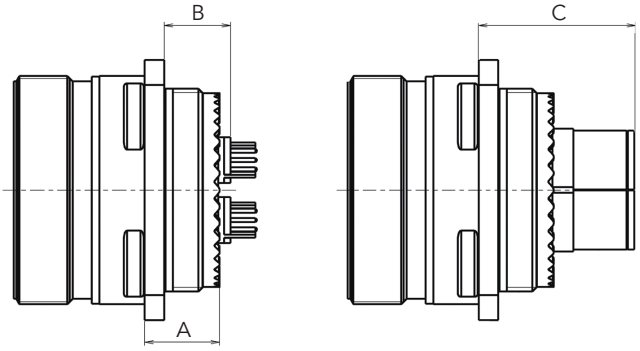

PC Tail contacts | Crimp contacts

Shell size	A Max			B Min			B Max			C Max
	Aluminum	Composite	Stainless steel, Titanium & Bronze	Aluminum	Composite	Stainless steel, Titanium & Bronze	Aluminum	Composite	Stainless steel, Titanium & Bronze	All materials
11 to 19	10.72	11.96	11.4	11.5	12.5	12	13.5	13.5	14	29
21 to 25	11.54	12.76	11.8	12	14.5	12.5	14	15.5	14.5	30

Jam nut receptacle - Type 7

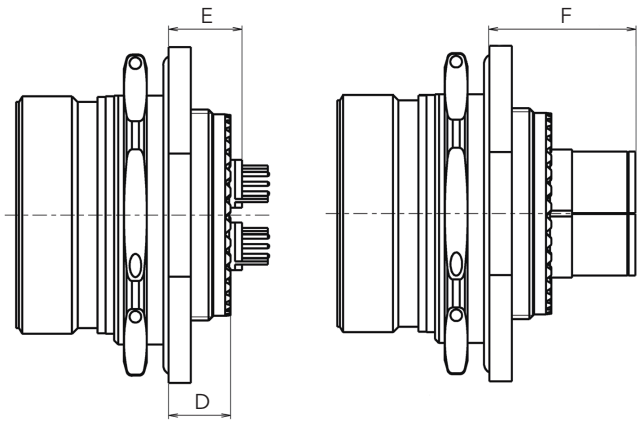

PC Tail contacts | Crimp contacts

Material	Aluminum, Stainless steel, Titanium & Bronze			
Shell size 11 to 25	D Max	E Min	E Max	F Max
	9.9	9.5	12	27

Plug - Type 5

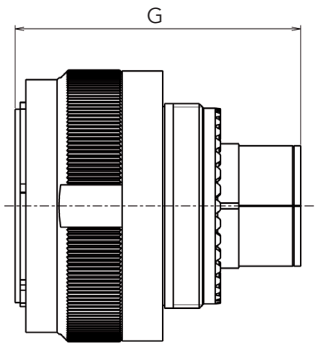

All materials	
Shell size 11 to 25	G Max
	48

Note: All dimensions are in millimeters (mm)

Dimensions

Quadrax crimp contact

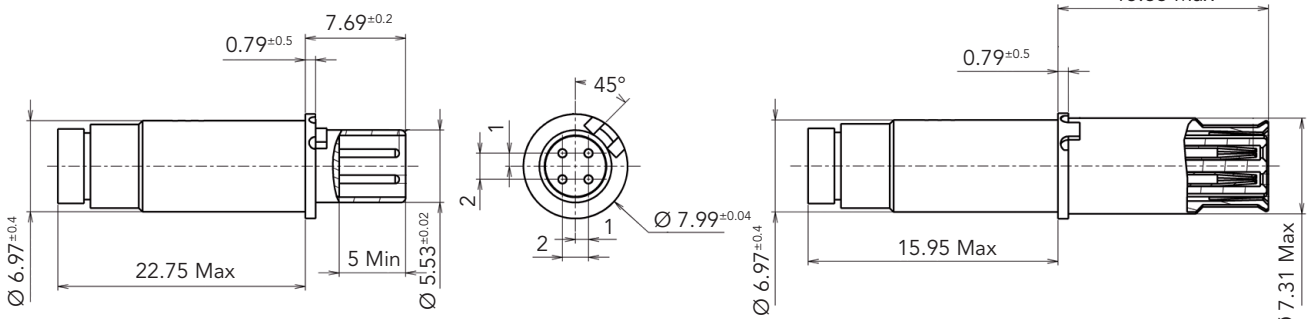

Male contact **Female contact**

Quadrax PCB contact

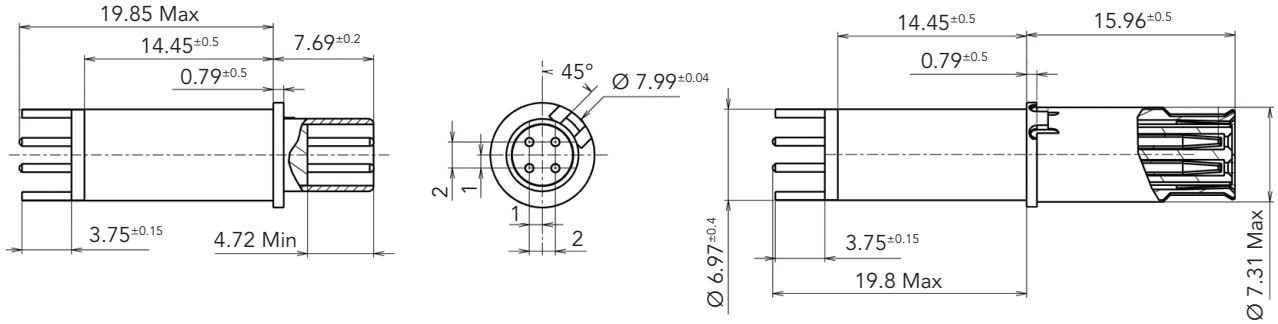

Male contact **Female contact**

Drill dimensions for PCB mount

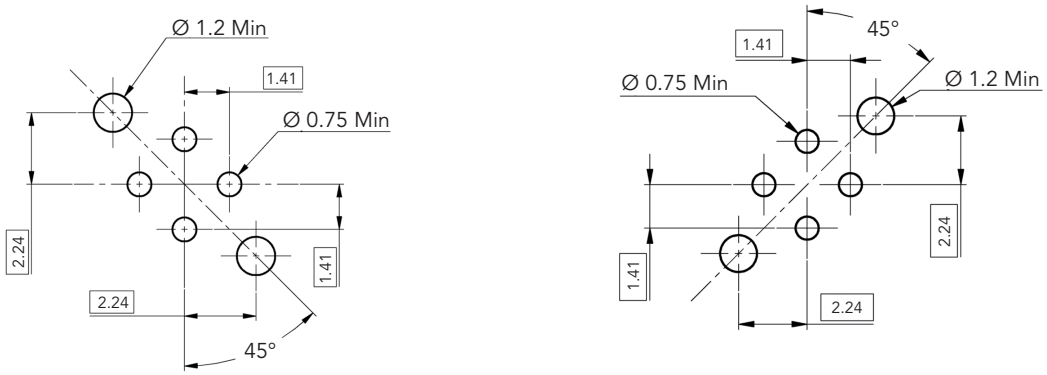

Male contact View from front face of PCB. **Female contact**

Note: All dimensions are in millimeters (mm)

Dimensions

Twinax crimp contact

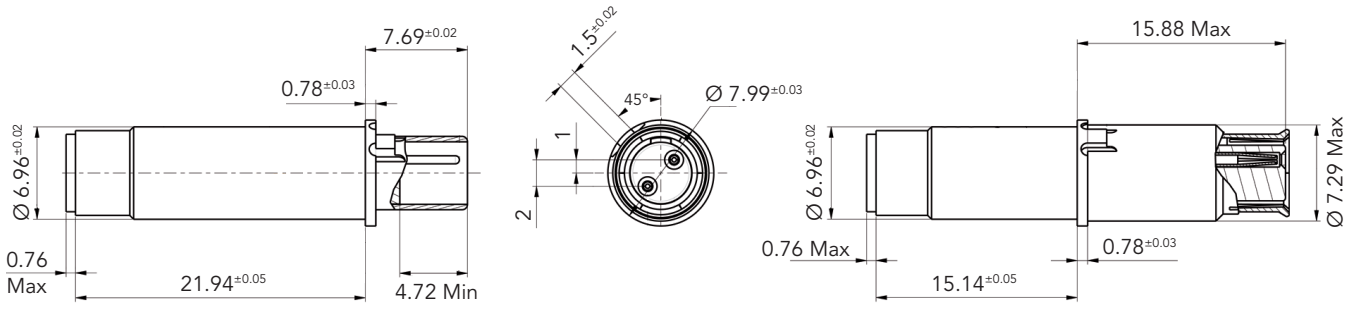

Male contact

Female contact

Contact ordering information

In-line alignment key. All crimp contacts are sealed thru a sealing boot. Crimp contacts ordered separately are delivered with sealing boot.

Contact type			SOURIAU part number	Cross Norm	Impedance	Release	T° Max
Quadrax contact	PC tail L= 4±0.1mm	Pin	ETH1-1237A	-	100Ω	Rear	125°C
			ETH1-1501A	-	150Ω	Rear	125°C
		Socket	ETH1-1238A	-	100Ω	Rear	125°C
	Crimp	Pin	ETH1-1345A	EN 3155-074	100Ω	Rear	150°C
			ETH1-1503A	-	150Ω	Rear	150°C
		Socket	ETH1-1346A	EN 3155-075	100Ω	Rear	150°C
			ETH1-1504A	-	150Ω	Rear	150°C
Twinax contact	Crimp	Pin	ETH2-1110A	-	100Ω	Rear	150°C
		Socket	ETH2-1111A	-	100Ω	Rear	150°C

Tooling

- Inner contacts: M22520/2-01 crimping tool and K709 locator

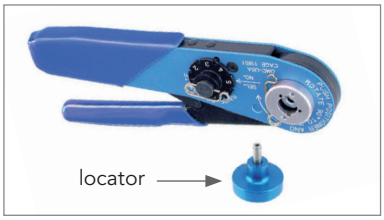

- Outer body: M22520/5-01 crimping tool and M22520/5-45 die set

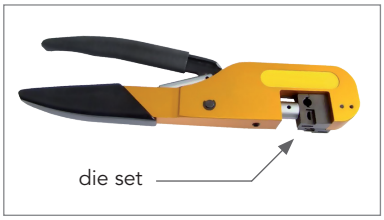

- Insertion/extraction tool, standard size 8 cavity tools: 8660-197 (metallic) or M81969/14-06 (plastic)

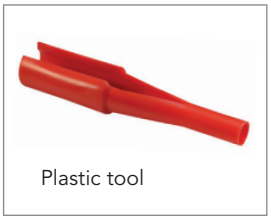

Recommanded cable

Impedance	Reference	Cable type	Number of pairs
100Ω	ABS 1503 KD24	Star quad	2

Note: All dimensions are in millimeters (mm)

Description

- Quick screw coupling D38999 connector
- Shell available in aluminum, composite, Stainless steel, Titanium & Bronze
- 16 layouts available with coaxial contact
- High Frequency coaxial contact: DC 18GHz
- Qualified coaxial contact according to MIL-STD-348A/321
- Removable coaxial contact
- Contacts delivered with boots

Technical features

BMA contact features

Electrical

- **Impedance:** 50Ω
- **Frequency range:** DC 18GHz
- **Dielectric withstanding voltage:** 1.5 kVrms, 50Hz (at sea level)
- **Insulation resistance:** ≥ 5 000 MΩ
- **Contact resistance:**
  . center contact: ≤ 2 mΩ
  . outer contact: ≤ 2 mΩ
- **Return loss (DC-18GHz):** < -17dB (mated connector)
- **RF leakage interface only (fully mated):** ≥ 90 dB f (GHz) measured at interface with reference planes being in true alignment.
- **RF testing voltage:** 1.0 kVrms, 5 MHz (at sea level)
- **Admissible power:** ≤ 300 W at 3 GHz (at sea level & room T°)

Environmental

- **Temperature range:** -65°C +125°C
- **Thermal shock:** MIL-STD-202, method 107, condition B
- **Moisture resistance:** MIL-STD-202, method 106
- **Corrosion:** Salt spray test according to MIL-STD-202, method 101, condition B
- **Vibration:** MIL-STD-202, method 204, condition D
- **Shock:** MIL-STD-202, method 213, condition I

/!\ Caution: be careful that your application doesn't exceed contact specification.

Connector features

Mechanical

- **Shell material & plating:**

. Aluminum:	Cadmium olive drab (W)
	Nickel (F)
	Black zinc nickel (Z)
	Green zinc cobalt (ZC)
. Composite:	Cadmium olive drab (J)
	Nickel (M)
	Without plating (X)
. Stainless steel:	Passivated (K)
	Nickel (S)
. Titanium:	Without plating (TT)
	Nickel (TF)
. Bronze:	Without plating

- **Insulator:** Thermoplastic
- **Grommet and interfacial seal:** Silicone elastomer
- **Contact endurance:** 1000 mating cycles
- **Connector endurance:** 500 mating cycles
- **Shock:** 300g, 3 ms
- **Vibration:**
  . Sinus:
    . 10 à 2000 Hz, 3x12 hrs
    (60g, 140 - 2000 Hz) with T° cycling
  . Random:
    . 50 to 2000 Hz, 2x8 Hrs
    (1g2/ Hz, 100 - 2000Hz) at T° max.
    . 25 to 2000 Hz, 2x8 Hrs
    (5g2/ Hz, 100 - 300Hz) at ambiant T°

Electrical

- **Shell continuity:**

. F, S & TF:	1 mΩ	. J & M:	3 mΩ
. W, Z & ZC:	2.5 mΩ	. Bronze:	5 mΩ
. K & TT:	10 mΩ		

- **Shielding:**

. F & M:	85 db at 1 GHz
. K & TT:	45 db at 10 Ghz
. W & Z:	50 db at 10 GHz
. F, S & TF:	65 db at 10 GHz
. Bronze:	85 db at 10 GHz
. J:	90 db at 10 GHz
. ZC:	Consult us

Environmental

- **Temperature range:**

. W, ZC, J, X & bronze:	-65°C +175°C
. F, Z, M, K, S, TT & TF:	-65°C +200°C

- **Salt spray:**

. F, S & TF:	48 Hours
. ZC:	250 Hours
. W, Z, K, TT & bronze:	500 Hours
. J, M & X:	2000 Hours

Contact layouts
Specification 737 mandatory

Contact #22D
Contact #20
Contact #16
Contact #12
Contact #8 Coax

11

80

1#8 Coax

17

02

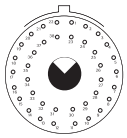

38#22D
1#8 Coax

22

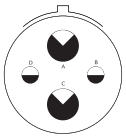

2#12
2#8 Coax

75

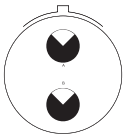

2#8 Coax

19

18

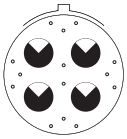

14#22D
4#8 Coax

21

20

18#20
2#8 Coax

48

4#8 Coax

75

4#8 Coax

77

17#22D
2#8 Coax

23

06

6#8 Coax

25

07

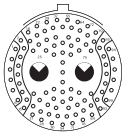

2#8 Coax
97#22D

08

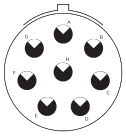

8#8 Coax

17

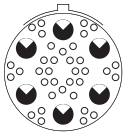

36#22D
6#8 Coax

20

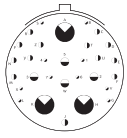

10#20, 13#16
4#12 Coax
3#8 Coax

41

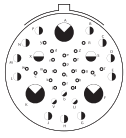

22#22D, 3#20
11#16, 2#12
3#8 Coax

46

40#20, 4#16
2#8 Coax

Ordering information

Basic Series	8D	0	25	W	46	P	N	737
Shell style: **0:** Square flange receptacle **1:** In line receptacle **7:** Jam nut receptacle **5:** Plug with RFI shielding								
Shell size: **11, 17, 19, 21, 23, 25**								
Aluminum plating: **W:** Olive drab cadmium **F:** Nickel **Z:** Black zinc nickel								
Contact layout: See previous page								
Contact type: **P:** Pin **S:** Socket								
Orientation: **N, A, B, C, D, E**								
Specification (mandatory): **737:** Coaxial contacts - for .086'' flexible cable **747:** Coaxial contacts - for .141'' flexible cable								

For other material and configuration (integrated clinch nuts, double flange, other cables, ...) please consult us.

Recommended cables

Designation	Part number	Description	
.086" flexible cable	Multiflex 86	Outer conductor contact	Soldered
.141" flexible cable	Multiflex 141		

For other cables please consult us.

Assembly instruction

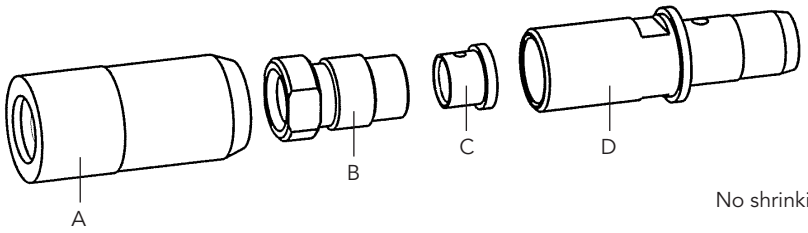

No shrinking sleeve allowed.

Picture	Process	Feature / Check	Tools required
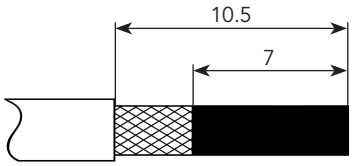	Dip the cut length of cable in flux and tin. Cut the jacket to the braid. Remove jacket.	The solder must flow at rear for min. 7 mm.	Stanley blade
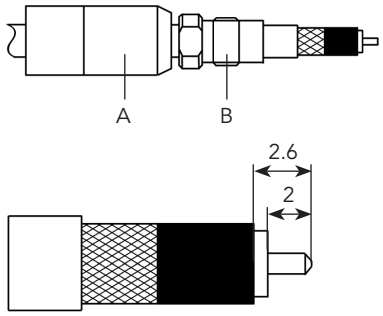	Remove cable dielectric and tinned braid according to diagram. Form tip of centre contact to a 90° cone. Slide Taper sleeve A and nipple B over cable.	Do not damage inner conductor, dielectric and braid of cable.	Stanley blade Tip trimmer
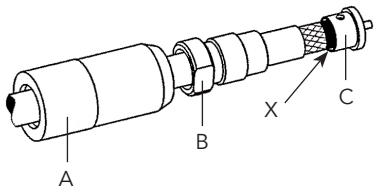	Slide ferrule C over cable, flush to dielectric. Solder at X. Avoid excessive heat, immediately cool down and clean with alcohol.	If the cable does not fit into the cable entry, use a flat-nose plier to calibrate the braid. Center conductor of cable must be exactly centered.	Soldering iron Solder Flat-nose pliers
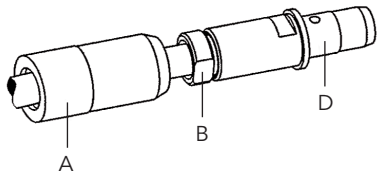	Push prepared cable into connector body D and tighten nipple B. Taper sleeve A will be used for MIL-connector.	Torque: 3 Nm.	Male contact: Torque wrench AF.6 (3 Nm) Spanner AF.5.5 Female contact: Torque wrench AF.6 (3 Nm) Spanner AF.6

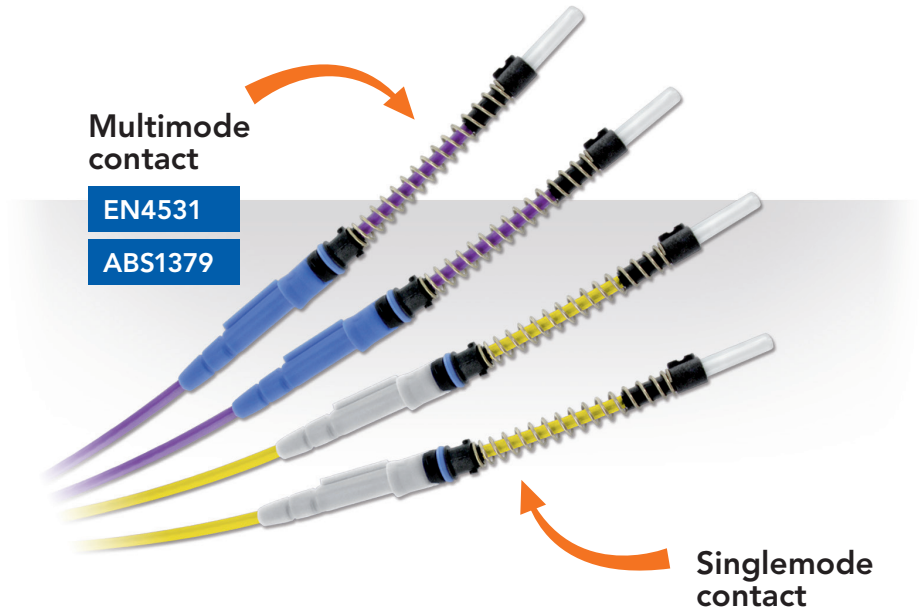

ELIO® contact
multimode & singlemode

- Robust 2.5mm ferrule
- Quick bayonet locking system. No tool needed
- Boot seal for sealing and bending restriction
- Compatible with tight and loose structure cable

Technical features

Mechanical

- **Endurance:**
  Minimum 500 mating/unmating operations
- **Shock:**
  300 g, 3 ms as per EN 2591-6402 method A
- **Vibration:**
  In MIL-DTL-38999 Series III/EN3645 connectors:
  - Sine 5Hz to 3000Hz as per EN2591-6403 method A
  - Random as per EN2591-6403 method B
- **Cable cyclic flexing*:**
  100 cycles, load 40N as per EN2591-609
- **Cable pulling*:** 111N
- **Cable torsion*:**
  100 cycles, load 40N as per EN2591-611

Environmental

- **Salt spray:**
  See the connector standard
- **Temperature range*:**
  - 65°C to +125°C (1000 hours)
- **Rapid temperature change:**
  10 cycles - 65°C / +150°C (30min/30min)
- **Air leakage:**
  Max leakage 16 cm^3/h, 2 hours, 40kPa differential pressure
- **Damp heat and low temperature:**
  5 cycles of 48h -65°C/+70°C with stage at 40°C with 95% of humidity as per EN2591- 6303 method A

Optical

- **Multimode contact - Insertion Loss (IL):**
  0.1dB typical
  < 0.3dB over 95% of the samples as per EN2591-601,
  < 0.7dB maximum on 100% of the samples after tests
- **Multimode contact - Return Loss (RL):**
  > 21dB before and after tests as per EN2591-605
- **Singlemode contact - Insertion Loss (IL):**
  0.3dB typical
  < 0.5dB over 95% of the samples as per EN2591-601,
  < 0.9dB maximum on 100% of the samples after tests
- **Singlemode contact - Return Loss (RL):**
  > 55dB typical and > 50dB mininum

Resistance to fluids as per MIL-DTL-38999/EN3645 standard

- **Fuel:** JP5
- **Mineral Hydraulic fluid:**
  MIL-PRF-5606 (NATO H-515)
- **Synthetic hydraulic fluid:**
  AS1241 (Skydrol 500B4, LD4)
- **Mineral lubricant:**
  MIL-PRF-7870 (NATO O-142)
- **Synthetic lubricant:**
  MIL-PRF-23699 (NATO O-156),
  MIL-PRF-7808 (NATO O-148)
- **Cleaning fluid:**
  MIL-PRF-87937 diluted, Propanol, white spirit, Azeotrope R113 + Methanol
- **De-icing fluid:**
  AMS 1424 (NATO S-742)
- **Extinguishing fluid:**
  Chlorobromethane
- **Cooling fluid:**
  Coolanol

* With multimode EN4641-100 cable and following the cabling process described in the "Technical Bulletin N°204 - ELIO® assembly wiring instructions" and the maintenance procedure in the document "Technical Bulletin N°170 - Fiber optics installation and maintenance procedure".

ELIO® contact - Ordering information

	ELIO	09N	G	L	A
Cable external diameter & Contact sealing: **09N:** $0.9^{\pm 0.1}$mm. Non waterproof **18N:** from 1.5mm to 1.9mm. Non waterproof **18W:** $1.8^{\pm 0.1}$mm. Waterproof **20N:** from 1.7mm to 2.1mm. Non waterproof **20W:** $2.0^{\pm 0.1}$mm. Waterproof					
Fibre type: **G:** ELIO® Multimode fibre, 125 micrometers cladding **E:** ELIO® Singlemode 9/125, PC polish					
Boot type: **L:** Long boot **S:** Short boot **N:** No boot (non waterproof version only)					
Contact version index					

Note: For ABS1379/EN4531 cross reference, please consult us.

ELIO® contact dimensions

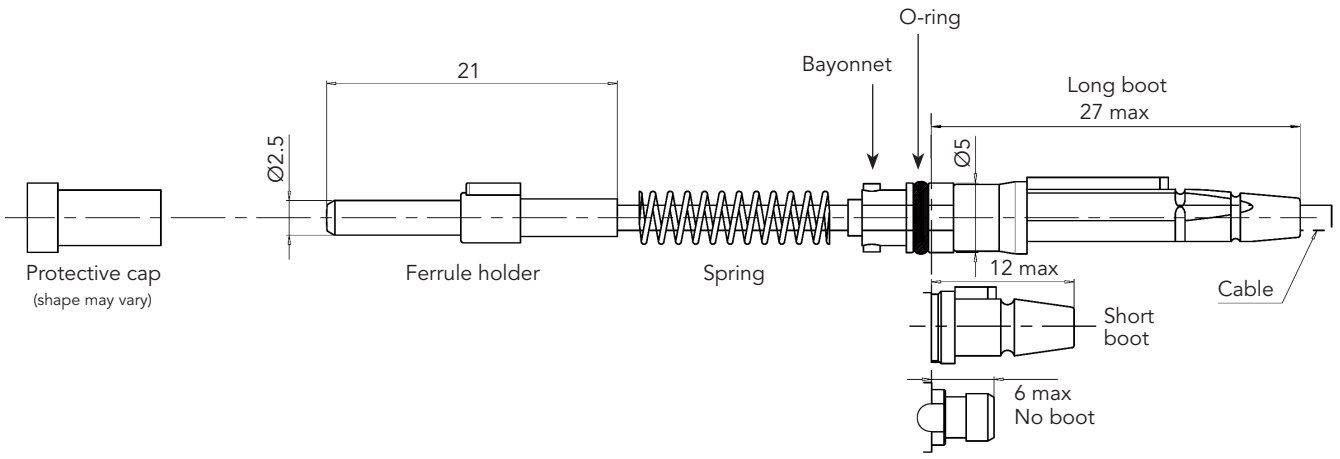

Recommended cables

SOURIAU can offer a wide range of cables in its assemblies, from low cost to high performance aeronautical cables.
ELIO® contact is compatible with singlemode and multimode cable, with tactical and breakout cable.
ELIO® contact is suitable with loose and tight structure cable.

See SOURIAU "ELIO® Fiber Optic Technology» catalog.

Note: All dimensions are in millimeters (mm)

EN4531

ABS1213

MIL-DTL-38999 Series III/EN3645

with ELIO®/ELIObeam contacts high density insert

- Standard MIL-DTL-38999/EN3645 shells without shielding ring (aluminum, composite, stainless steel, bronze)
- Environmental performance as per EN4531 based on MIL-DTL-38999/EN3645
- Temperature range: - 65°C to +125°C (cable limitation)

Contact layouts

09	11	13	15
01	02	04	06
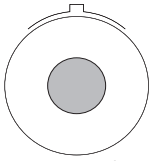	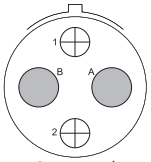	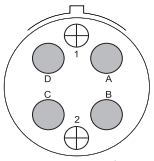	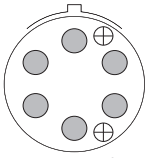
1 optical way	2 optical ways	4 optical ways	6 optical ways

Note: Layouts 15-06 limited availability, please consult us.

19	21	25
08	12	24
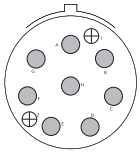	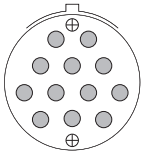	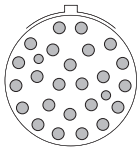
8 optical ways	12 optical ways	24 optical ways

Ordering information, Accessories & Tooling

See SOURIAU "ELIO® Fiber Optic Technology» catalog.

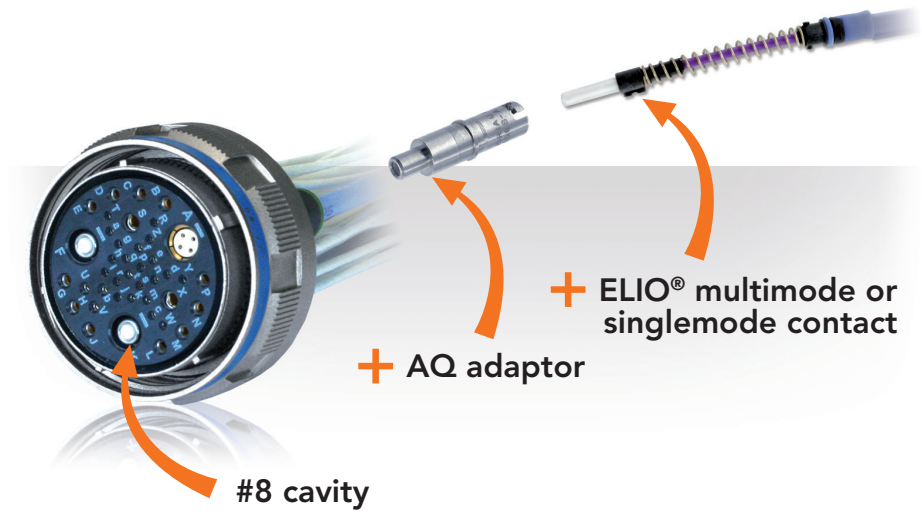

MIL-DTL-38999 Series III/EN3645

with #8 Quadrax cavity adaptor for ELIO®/ELIObeam contacts

- ELIO® AQ is an adaptor to enable the ELIO® and ELIObeam contact to fit in any #8 cavities
- Multiple possibilities to mix optical and electrical signals in the same insert
- Compatible with standard MIL-DTL-38999 Series III/EN3645 connectors (aluminum, composite, stainless steel, bronze)
- Design ensures ELIO® and ELIObeam optical performance
- Environmental performance as per MIL-DTL-38999 and EN3645 standard
- Temperature range: - 65°C to +150°C (cable limitation)

Applications

- Fiber optic connector for all military and aeronautical applications wherever severe vibration or mechanical resistance are required.

AQ Adaptor

for #8 Quadrax cavity

Insert type	Part Number Multimode	Part Number Singlemode
Male Insert	ELIOAQ6PB	ELIOAQ6PB
female Insert	ELIOAQ6SB	ELIOAQ6SB674

Delivered with alignment boot.

Accessories & Tooling

See SOURIAU "ELIO® Fiber Optic Technology» catalog.

Dimensions

See pages 100 and 101.

Layouts

11

81

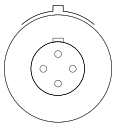

1 #8 Quadrax

17

80

2 #12
2 #8 Quadrax

81

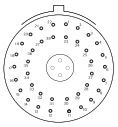

38 #22D
1 #8 Quadrax

82

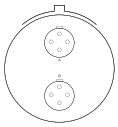

2 #8 Quadrax

19

84

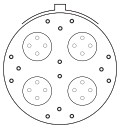

14 #22D
4 #8 Quadrax

21

78

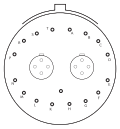

17 #22D
2 #8 Quadrax

84

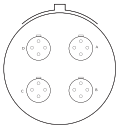

4 #8 Quadrax

25

80

10 #20
13 #16, 4 #12,
3 #8 Quadrax

81

22 #22D, 3 #20,
11 #16, 2 #12,
3 #8 Quadrax

82

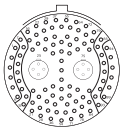

97 #22D
2 #8
Quadrax

86

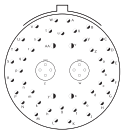

40 #20
4 #16
2 #8 Quadrax

87

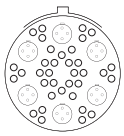

36 #22D
6 #8
Quadrax

88

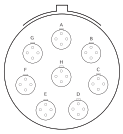

8 #8
Quadrax

Dimensions

Plug and receptacles - mated / unmated

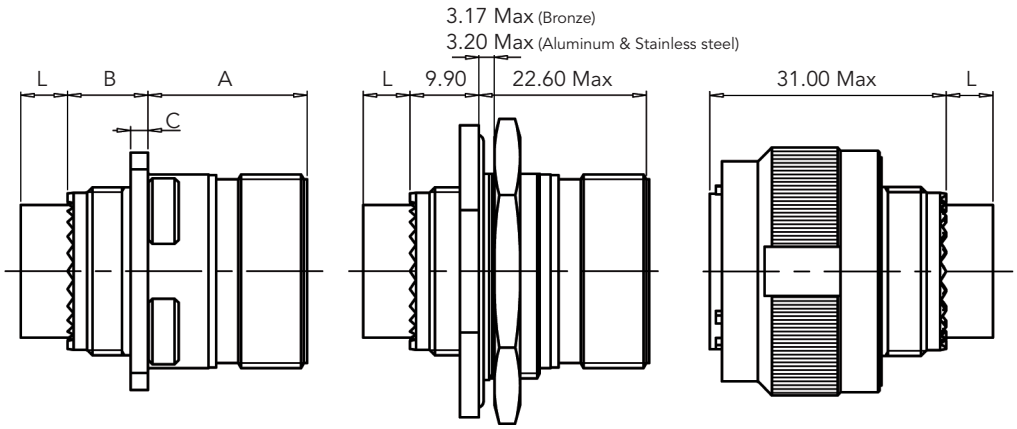

Type 0
Square Flange Receptacle

Type 7
Jam Nut Receptacle

Type 5
Plug

	A		B		C	
	Shell size 09 to 19	Shell size 25	Shell size 09 to 19	Shell size 25	Shell size 09 to 19	Shell size 25
Receptacle Type 0 & 7 Metal	20.90 Max	20.10 Max	12.50 Max	13.00 Max	2.50 Max	3.20 Max
Receptacle Type 0 Composite	20.90 Max	20.10 Max	12.50 Max	13.00 Max	3.65 Max	4.35 Max

L	
Male insulator	Female insulator
4 Max	6.60 Max

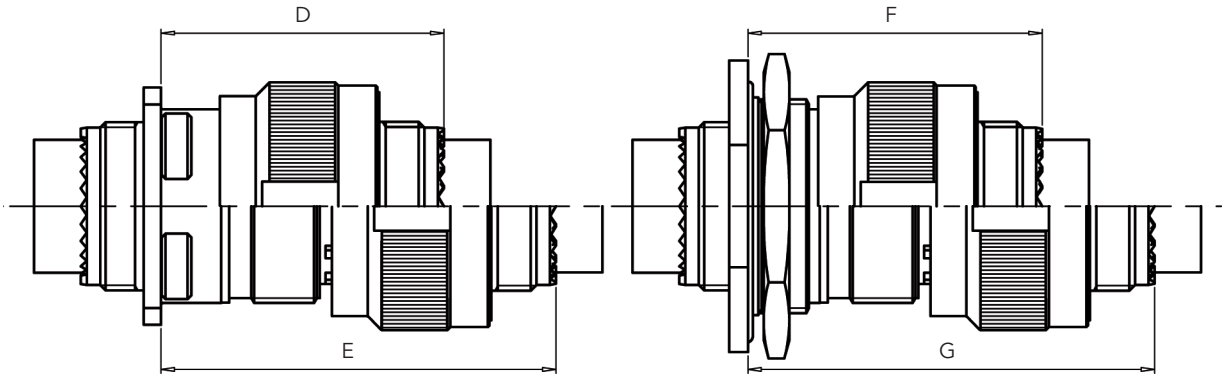

	D		E		F		G	
	Shell size 09 to 19	Shell size 25	Shell size 09 to 19	Shell size 25	Shell size 09 to 11	Shell size 13 to 25	Shell size 09 to 11	Shell size 13 to 25
Plug + Receptacle Type 0 & 7 Metal	37.00 Max	36.50 Max	52.30 Max	51.50 Max	39.00 Max	39.00 Max	54.00 Max	54.00 Max
Plug + Receptacle Type 0 Composite	37.00 Max	36.50 Max	52.30 Max	51.50 Max	N/A	N/A	N/A	N/A

Note: All dimensions are in millimeters (mm)

Lengths - connectors with contacts

38999 Series III/EN3645 with ELIO® contacts in ELIO® high-density insert

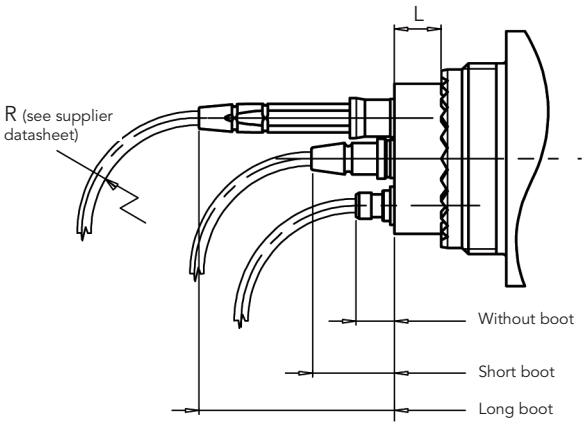

38999 Series III/EN3645 with ELIO® contacts in ELIO® AQ adaptors

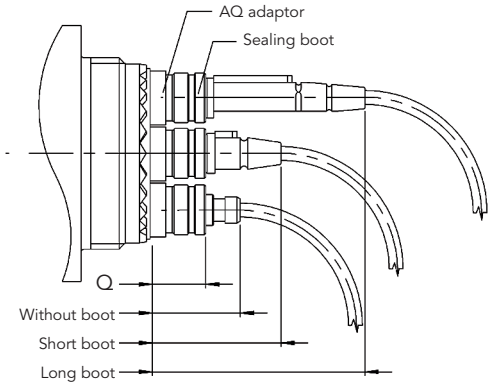

	ELIO® high density insert					ELIO® AQ adaptors							
	L		Contact length			Q		Contact length					
								Long boot		Short boot		Without boot	
	Male insulator	Female insulator	Without boot	Short boot	Long boot	Male insulator	Female insulator	Male insulator	Female insulator	Male insulator	Female insulator	Male insulator	Female insulator
Plug	4 Max	6.60 Max	6 Max	12 Max	27 Max	12 Max	9.5 Max	34.5 Max	32 Max	19.5 Max	17 Max	12.5 Max	10 Max
Square flange receptacle						12.5 Max	10 Max	35 Max	32.5 Max	20 Max	17.5 Max	13 Max	10.5 Max
Jam nut receptacle						12 Max	9.5 Max	34.5 Max	32 Max	19.5 Max	17 Max	12.5 Max	10 Max

Total length example

Square flange receptacle + plug + ELIO® contacts in ELIO® high-density insert

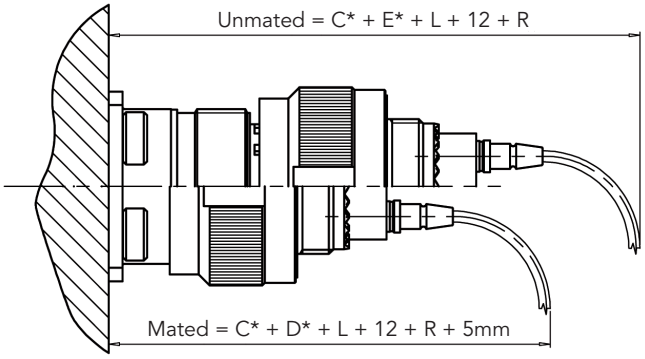

* See previous page

Note: All dimensions are in millimeters (mm)

EN4531 Style

ABS1379 Style

ELIObeam contact

- Fit in all ELIO® standard cavities (ABS1213, EN4531)
- Optical lense for expanded beam
- Allows signal communication without physical contacts
- Used like ELIO® standard contact

Technical features

Mechanical

- **Endurance:**
  Minimum 500 mating/unmating operations
- **Shock:**
  300 g, 3ms as per EN 2591-6402 method A
- **Vibration:**
  In MIL-DTL-38999 Series III/EN3645 connectors:
  - Sine 5Hz to 3000Hz as per EN2591-6403 method A
  - Random as per EN2591-6403 method B
- **Cable cyclic flexing*:**
  100 cycles, load 40N as per EN2591-609
- **Cable pulling*:** 111N
- **Cable torsion*:**
  100 cycles, load 40N as per EN2591-611

Environmental

- **Salt spray:** See the connector standard
- **Temperature range*:**
  - 65°C to +125°C (1000 hours)
- **Rapid temperature change:**
  10 cycles - 65°C / +150°C (30min/30min)
- **Air leakage:**
  Max leakage 16 cm^3/h, 2 hours, 40kPa differential pressure
- **Damp heat and low temperature:**
  5 cycles of 48h -65°C/+70°C with stage at 40°C with 95% of humidity as per EN2591- 6303 method A

Optical

- **Multimode contact - Insertion Loss (IL):**
  < 0.7dB mean 95% of the samples as per EN2591-601,
  < 1.0dB maximum on 100% of the samples after tests
- **Multimode contact - Return Loss (RL):**
  > 16dB before and after tests as per EN2591-605

Resistance to fluids as per MIL-DTL-38999/EN3645 standard

- **Fuel:** JP5
- **Mineral Hydraulic fluid:**
  MIL-PRF-5606 (NATO H-515)
- **Synthetic hydraulic fluid:**
  AS1241 (Skydrol 500B4, LD4)
- **Mineral lubricant:**
  MIL-PRF-7870 (NATO O-142)
- **Synthetic lubricant:**
  MIL-PRF-23699 (NATO O-156),
  MIL-PRF-7808 (NATO O-148)
- **Cleaning fluid:**
  MIL-PRF-87937 diluted, Propanol, white spirit, Azeotrope R113 + Methanol
- **De-icing fluid:** AMS 1424 (NATO S-742)
- **Extinguishing fluid:** Chlorobromethane
- **Cooling fluid:** Coolanol

* With multimode EN4641-100 and EN4641-301 cables and following the maintenance procedure in the document "Technical Bulletin N°170 - Fiber optics installation and maintenance procedure".

Principle of expanded beam

The expanded beam concept expands and collimates the beam from the launch fiber. Without mechanical contact of the optical elements, the beam remains collimated until it is focused down to the receiving fiber.

The beam expansion at the interface provides protection of the fiber from contaminants.

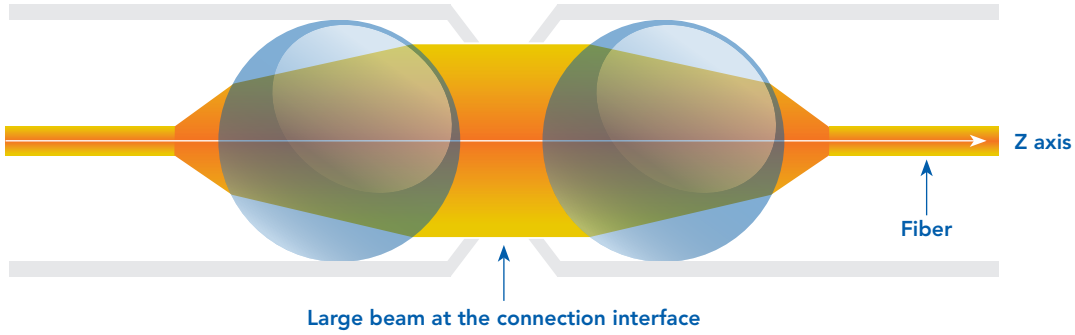

ELIObeam contact - Ordering information

	EOB1	09N	G	L	A
Cable external diameter & Contact sealing: **09N:** $0.9^{\pm0.1}$mm. Non waterproof **18N:** from 1.5mm to 1.9mm. Non waterproof **18W:** $1.8^{\pm0.1}$mm. Waterproof **20N:** from 1.7mm to 2.1mm. Non waterproof **20W:** $2.0^{\pm0.1}$mm. Waterproof					
Fibre type: **G:** ELIOBEAM® Multimode fibre, 50/125 or 62.5/125					
Boot type: **L:** Long boot **S:** Short boot **N:** No boot (non waterproof version only)					
Contact version index					

ELIOBEAM contact dimensions

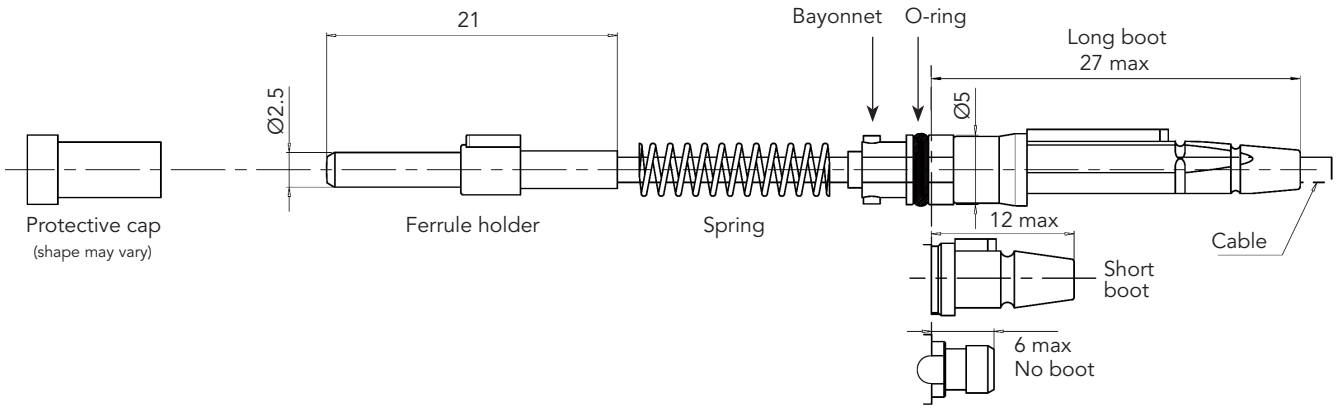

Note: All dimensions are in millimeters (mm)

Recommended cables

SOURIAU can offer a wide range of cables in its assemblies, from low cost to high performance aeronautical cables.
ELIOBEAM contact is compatible with singlemode and multimode cables, with tactical and breakout cables.
ELIOBEAM contact is suitable with loose and tight structure cable.

See next page and SOURIAU "ELIO® Fiber Optic Technology" catalog.

#8 Adaptors, Accessories & Tooling

See SOURIAU "ELIO® Fiber Optic Technology" catalog.

Your optical patchcord in 3 steps!

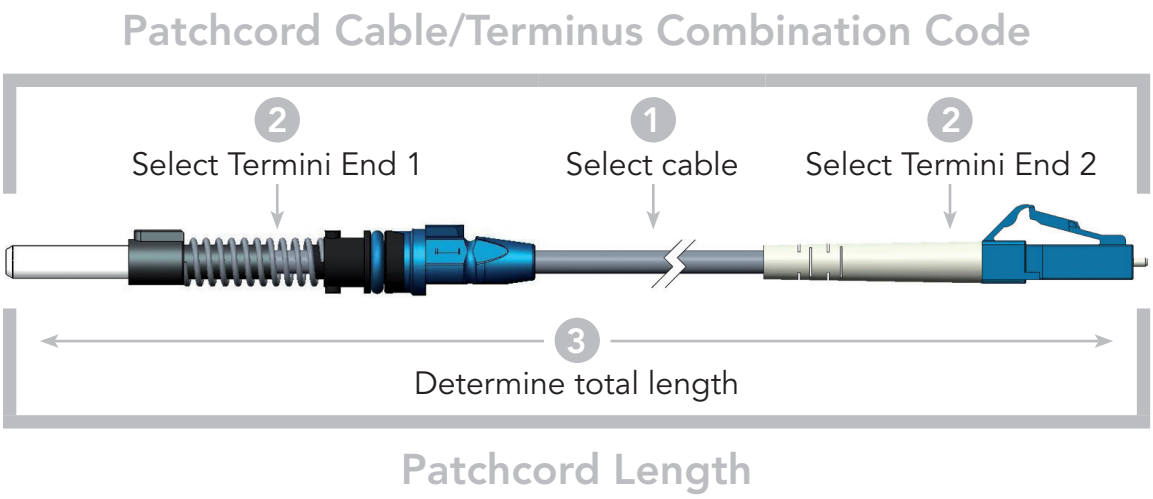

Optical patchcord ordering information

	HA02	XXXX	XXX	M	A
Patchcord cable/terminus combination code: **XXXX:** See tables next page					
Patchcord length: In meter when possible. Examples: - for a 3 meter assembly, use **003**(M) and not 300(CM) - for a 3.5 meter assembly, use **350**(CM)					
Length unit: **M:** Meter **CM:** Centimeter					
Patchcord version index					

Standard length tolerances

Patchcord from 30 cm to 1 m	0 / + 5 cm
Patchcord from 1 m to 4 m	0 / + 10 cm
Patchcord from 4 m to 15 m	0 / + 20 cm
Patchcord > 15 m	0 / + 30 cm

Note: To create your patchcord part number, select your patchcord combination code in tables nest pages (1st contact - 2nd contact - Fiber Optic cable) and the length of your assembly on 3 digits in meter (M) or centimetre (CM). You must use meter when possible (see examples above).

1 Select cable

SOURIAU offers a wide range of cables, from cost efficient to high performance aeronautical cables.
Select your optical fiber's properties. Temperature range can be critical for your applications.
If you need any help on a criteria selection, please contact us.

Application	Fiber type	Cable diameter	Temperature range	Tensile strength (N)	OM class	Attenuation (dB.km-1)*	Min. bend radius (mm)	Weight (kg.km-1)	Structure outer jacket	Standard	Cable type
FOR FLYING USE High performance cables	62.5/125	1.8	-55°C to +125°C	250	OM2	4.0/2.0	20	4	Tight	ABS0963-003LF, EN4641-102	**FCABLE11**
	62.5/125	0.9	-55°C to +125°C	20	OM2	4.0/2.0	10	1	NA	EN4641-101	**FCABLE41**
	50/125	1.8	-65°C to +135°C	200	OM3	4.0/2.0	5	4	Tight	EN4641-301	**FCABLE22**
FOR HARSH ENVIRONMENT Cost efficient cables	50/125	1.8	-40°C to +85°C	130	OM3	3.0/1.0	25	2.2	Loose	-	**FCABLE42**
	62.5/125	1.8	-40°C to +85°C	130	OM1	3.5/1.5	25	2.2	Loose	-	**FCABLE61**

* 1st value @850nm for multimode cable, 2nd value @1300nm for multimode (respectivly 1300nm and 1550nm for singlemode)
Consult us for other harsh environment cables.

2 Select termini end 1 & 2 according to your selected cable, and get your final Patchcord cable/Terminus combination code

Most common cables with most common contacts - For other combinations please consult us.
All contacts are UPC polished otherwise specified.

Termini End 2 / Termini End 1	EOB118WGLA				EOB109NGLA
	Cable types				Cable type
	FCABLE11	FCABLE22	FCABLE42	FCABLE61	FCABLE41
ELIO18NGLA	3060	3071	3091	3102	N/A
ELIO18NGNA	3061	3072	3092	3103	N/A
ELIO18NGSA	3062	3073	3093	3104	N/A
ELIO18WGLA	3063	3074	3094	3105	N/A
ELIO18WGSA	3064	3075	3095	3106	N/A
LC Simplex	3065	3076	3097	3108	3086
ARC1G18TA	3066	3077	N/A	N/A	N/A
ARC1G18LA	N/A	N/A	3098	3109	N/A
ARC1G09TA	N/A	N/A	N/A	N/A	3087
FC/PC	3067	3078	3096	3107	3085
SC	3068	3079	3099	3110	3088
ST	3069	N/A	3100	3111	3089
ST2	N/A	3080	N/A	N/A	N/A
EOB118WGLA	3070	3081	3101	3112	N/A
ELIO09NGLA	N/A	N/A	N/A	N/A	3082
ELIO09NGNA	N/A	N/A	N/A	N/A	3083
ELIO09NGSA	N/A	N/A	N/A	N/A	3084
EOB109NGLA	N/A	N/A	N/A	N/A	3090

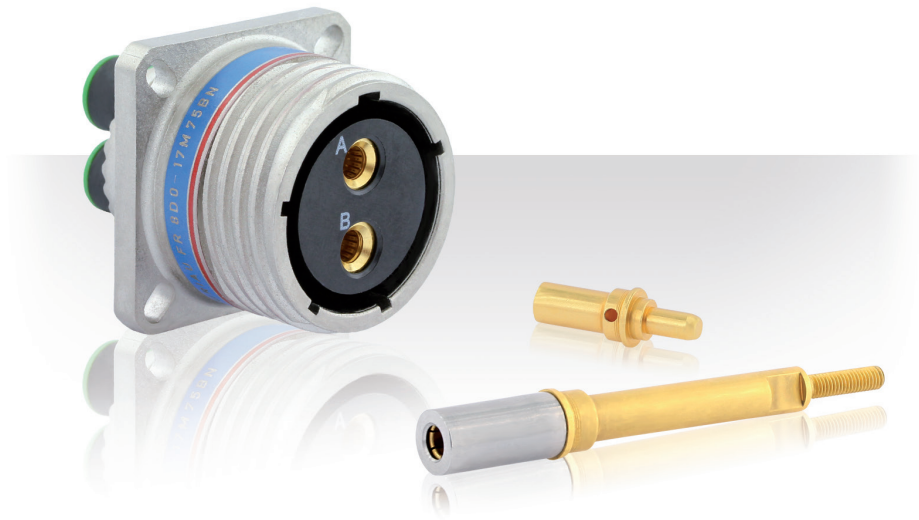

Description

- Quick screw coupling connector with removable crimp contact
- Shell available in aluminum, composite, Stainless steel, Titanium & Bronze
- Six layouts with different current rating
- Consult us for power hermetic version
- High Power offer available on demand

Technical features

Mechanical

- **Shell:** Aluminum alloy, Composite, Bronze, Stainless steel, Titanium
- **Plating:**
  . Olive green cadmium (W/J)
  . Nickel (F/M/TF/S)
  . Without plating (X for composite, TT for titanium and JVS for Bronze)
  . Passivated (K)
- **Grommet and seal:** Silicon elastomer
- **Insulator:** Thermoset
- **Contact body:** Copper Alloy
- **Contact retention:**
  . #4 = 200N
  . #8 = 111N
- **Shock:** 300g during 3ms
- **Endurance:**
  500 mating / unmating operations
- **Vibration:** As per MIL DTL 38999

Electrical

- **Dielectric withstanding:**
  Test voltage rating (Vrms)

Service	Sea level	at 21 000 m
M	1 300	800
I	1 800	1 000

- **Insulation Resistance:**
  5000 MΩ under 500 Vdc
- **Max current rating per contact:**
  . #4 = 80A
  . #8 = 45A
- **Contact resistance:**
  . #4 = 2mΩ
  . #8 = 3mΩ
- **Shielding:** As per MIL DTL 38999
- **Shell continuity:**
  . W = 2.5 mΩ
  . F = 1mΩ
  . J, M = 3 mΩ
  . JVS = 5 mΩ

Environmental

- **Temperature range:**
  . W, J, X, JVS = - 65°C +175°C
  . F, M, K, S, TT, TF = - 65°C +200°C
- **Sealing:** As per MIL DTL 38999
- **Damp Heat:** As per MIL DTL 38999
- **Salt Spray:**
  . W, TT, TF, K, JVS = 500 hours
  . F, S = 48 hours
  . J,M,X = 2000 hours
- **Fire resistance:**
  As per EN 2591 - C 17 method A
- **Resistance to fluid:**
  As per MIL DTL 38999

Connector part numbers

Aluminum, Composite, Stainless steel & Titanium connector

Basic Series	8D	0	-	11	W	80	P	N	251

Style:
- **0:** Square flange receptacle
- **5:** Plug with RFI shielding
- **7:** Jam nut receptacle

Type: Crimp contact

Shell size: 11, 17, 19, 21, 23, 25

Plating:
Aluminum shell:
- **W:** Olive drab cadmium
- **F:** Nickel
- **ZC:** Green zinc cobalt
- **Z:** Black zinc nickel

Composite shell:
- **J:** Olive green cadmium
- **M:** Nickel
- **X:** Without plating

Stainless steel shell:
- **K:** Corrosion resistant
- **S:** Nickel

Titanium shell:
- **TT:** Without plating
- **TF:** Nickel

Contact layouts: See next page

Contact style:
- **P:** Pin contact
- **S:** Socket contact
- **A:** Male connector supplied without contact
- **B:** Female connector supplied without contact

Orientation: N, A, B, C, D, E

Specification:
- **251:** Mandatory for some layouts supplied with power contacts (see next page)

Bronze connector

Basic Series	JVS	16	A	11	80	P	N	251

Style:
- **00:** Square flange receptacle
- **07:** Jam nut receptacle
- **16:** Plug

Material:
- **A:** Bronze shell material

Shell size: 11, 17, 19, 21, 23, 25

Contact layouts: See next page

Contact style:
- **P:** Pin contact
- **S:** Socket contact
- **A:** Male connector supplied without contact
- **B:** Female connector supplied without contact

Orientation: N, A, B, C, D, E

Specification:
- **251:** Mandatory for some layouts supplied with power contacts (see next page)

Contact layouts

- Contact #22D
- Contact #20
- Contact #16
- Contact #12
- Contact #8 Power
- Contact #4 Power

11

80
Spec 251

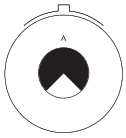

1#8

17

02
Spec 251

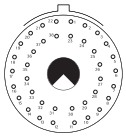

38#22D
1#8

22
Spec 251

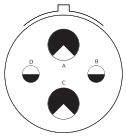

2#12
2#8

75
Spec 251

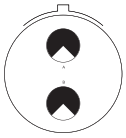

2#8

19

18
Spec 251

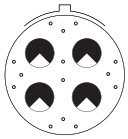

14#22D
4#8

21

20
Spec 251

18#20
2#8

42*

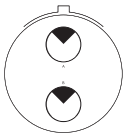

2#4

48*

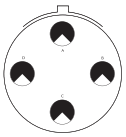

4#8

72*

6#16
2#4

75
Spec 251

4#8

77
Spec 251

17#22D
2#8

23

06
Spec 251

6#8

25

07
Spec 251

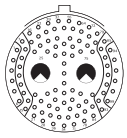

97#22D
2#8

08
Spec 251

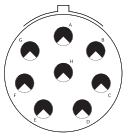

8#8

17
Spec 251

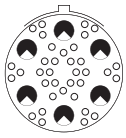

36 #22D
6 #8

20
Spec 251

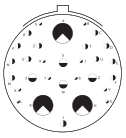

10#20
13#16
4#12 3#8

41
Spec 251

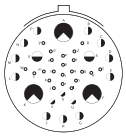

22#22D, 3#20
11#16, 2#12
3#8

44*

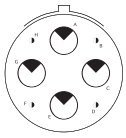

4#16
4#4

46
Spec 251

40#20
4#16
2#8

* Power contacts on standard, no spec. 251 needed.

Power contacts

Contact size	Contact type	Part number	Reducer	Cable size max.		Boot
				AWG	mm²	
#4	Male	85997598900*	Without	N/A	25 mm²	N/A not sealed
	Female	85997599900*				
	Male	85997534		AWG 4	16 to 21 mm²	85994594 for cable 16mm²
	Female	85997535				
	Male	85997524		AWG8	9 mm²	N/A not sealed
	Female	85997525				
	Male	85997534	85932000A	AWG6	10 mm²	85994593
	Female	85997535				
	Male	85997528900	Without	AWG6	10 mm²	
	Female	85997529900				
#8	Male	85997580	Without	AWG8	9 mm²	85994542
	Female	85997581				
	Male	85997580	85997645	AWG10	6 mm²	85994547
	Female	85997581				
#8 according to EN 3155	Male	85996215900	Without	AWG8	9 mm²	85994542
	Female	85996217900				
	Male	85996216900		AWG10	6 mm²	85994547
	Female	85996218900				
#8 JVS only	Male	85997544	Without	AWG8	9 mm²	85994542
	Female	85997541				
	Male	85997544	85997645	AWG10	6 mm²	85994547
	Female	85997541				

Cable section AWG	#22	#20	#16	#12	#10	#8	#4
mm² maxi	0.34	0.6	1.34	3.18	5.8	9	21
mm² mini	0.095	0.21	0.6	1.91	3.8	5.8	16

* Not included in connector P/N.
Must be ordered separately.

Bus bar contact

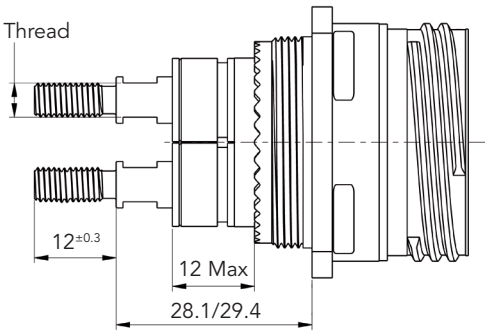

Contact size	Thread	Part number			Lug Ø
		Male	Female	Boots	
#4	M5x0.8	85930873A900	85930875A900	85994594	5.2
#8	M3x0.5	85930872A900	85930874A900	85994542	3.2

Contacts available separately only.
Lug: tin over copper recommended. Dimensions for indication only.

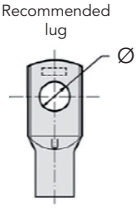

Note: All dimensions are in millimeters (mm)

Power tools

Contact size	Contact type	Contact reference	Cable AWG	Crimping tool			Contact extraction tool (metallic)	Contact extraction tool (plastic)
				Automatic tool: M22520/23-01		Manual hand tool: M300 BT		
				Die set	Locator	Locator		
#4	Male	8599-7534	#4-5 or #10-16mm²	M22520/23-04	M22520/23-11	N/A	8533-8175	M81969/14-07
	Female	8599-7535						
#8 JVS only	Male	8599-7544	#8 or #10	M22520/23-02	8599-9601	SP 593	8660-197	M81969/14-12
	Female	8599-7541						
#8	Male	8599-7580						
	Female	8599-7581						

Automatic tool for contacts #4 & #8

Crimping tool M22520/23-01

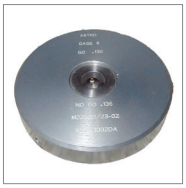

Die set

Locator

Manual hand tool for contacts #8

Crimping tool M300 BT

Locator

Extraction tool

Metallic tool

Description

- Threaded coupling connector with single power contact
- Aluminum shell
- 3 shell sizes available:
  - size 19: Up to 450 A at 40°C
  - size 23: Up to 650 A at 40°C
  - size 25: Up to 850 A at 40°C
- Silver plated contact
- Pin contact is equipped with a plastic cap to prevent electrical shock
- Modular design:
  . Removable backshell: straight, right angle or threaded contact
  . Backshell termination: shrink boot

Technical features

Mechanical

- **Shell:** Aluminum alloy
- **Shell plating:**
  Black zinc nickel (Z)
  Cadmium olive drab (W)
- **Insulator:** Thermoplastic
- **Grommet and interfacial seal:**
  Silicone elastomer
- **Contact body:** Copper alloy
- **Endurance:**
  500 mating/unmating operations
- **Vibration:**
  According Def Stan 00-35
  4.2 g rms vert - 6h/3 axes

Electrical

- **Test voltage**
  > 1500 V
- **Shell to shell continuity** (no backshell)
  < 2.5 mΩ
- **EMI**
  85 dB @ 1GHz (F)

- **Connector rating**

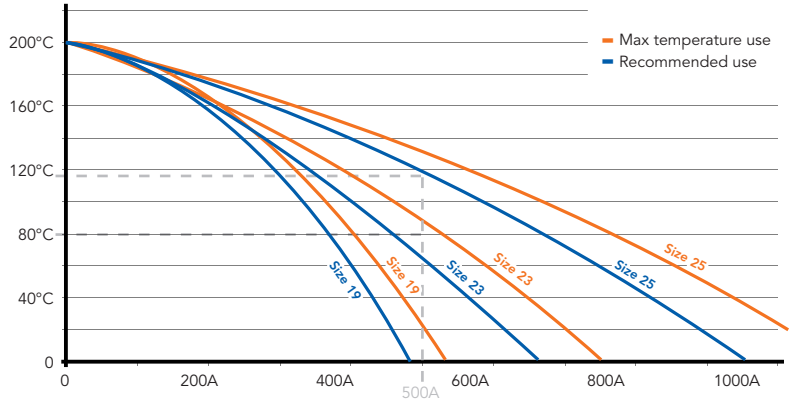

Example for 500A:
Shell size 25 with contact diameter 20: max temperature 135°C; recommended 120°C
Shell size 23 with contact diameter 18: max temperature 90°C; recommended 80 °C
Shell size 19 with contact diameter 14: not recommended
Wire must be compatible with current and temperature used for the connector.

Environmental

- **Temperature range:**
  -65°C +175°C
- **Sealing:**
  IP67 on mated connector (1 meter/30 min)
- **Salt spray:** 500 hours
- **Creepage and clearance:**
  Min length in mm according to IEC60664-1

Shell size	Creepage	Clearance
19	2.805	2.492
23	2.830	4.492
25	2.715	4.492

Resistance to fluids

- **According to MIL-DTL-38999 standard**
  . Gasoline: JP5 (OTAN F44)
  . Mineral hydraulic fluid: MIL-H-5606 (OTAN H515)
  . Synthetic hydraulic fluid: Skydrol 500 B4
- **LD4 (SAE AS 1241)**
  . Mineral lubricating: MIL-L-7870A (OTAN 0142)
  . Synthetic lubricating: MIL-L-23699 (OTAN 0156), MIL-L-7808
  . Cleaning fluid: MIL-C-87936 diluted
  . De-icing fluid: MIL-A-8243
  . Extinguishing fluid: Bromochloromethane
  . Cooling fluid: Coolanol

Contact layouts

19	23	25
H1	H1	H1
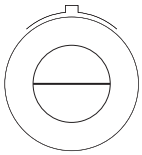	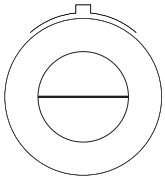	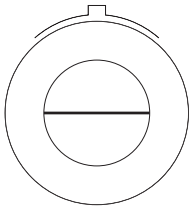

Other size: Please consult us.

Ordering information

Basic Series	8D	0	25	W	H1	P	N	R1	A

Style:
- **0:** Square flange receptacle
- **5:** Plug (available with backshell D1, R1, G0 & W0 Types)
- **7:** Jam nut receptacle

Shell size: 19, 23, 25

Plating:
- **Z:** Zinc Nickel
- **W:** Olive green cadmium

H1: Single power

Contact style:
- **P:** Pin contact
- **S:** Socket contact

Orientation: N, A, B, C, D, E

Backshell type:
- **D1:** Straight backshell shrink boot & EMI (crimp version)
- **R1:** Right angle backshell shrink boot & EMI (crimp version)
- **G0:** Backshell low profile (threaded termination)
- **W0:** Without backshell (threaded termination)

Specification for backshells D1 & R1 Types (crimp version):

Specification	Shell size	Admissible cable (mm)		Barrel diameter (mm $^{\pm 0.05}$)
		Outer Ø max	Nominal core Ø	
A	19	17	10.15	10.8
B	19	17	11.1	11.8
C	19	17	12	12.5
D	23	22	14.05	15
E	23	22	16.3	17
	25	26.5		
F	25	26.5	19	20.5

Specification for backshells G0 & W0 Types (only threaded termination):

Specification	Shell size	Thread
C	19, 23 & 25	M12

Other thread, please consult us.

Note: For other configuration, please consult us.

Backshell type

Description

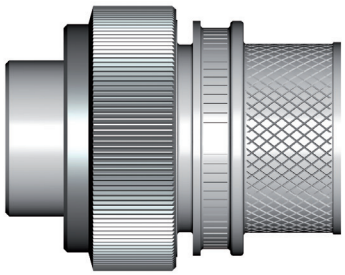

D1: Straight backshell shrink boot & EMI (crimp version)

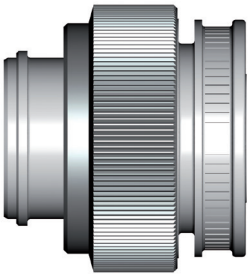

G0: Backshell low profile (threaded termination)

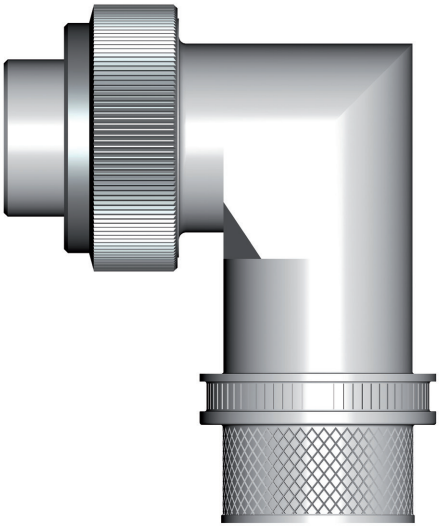

R1: Right angle backshell shrink boot & EMI (crimp version)

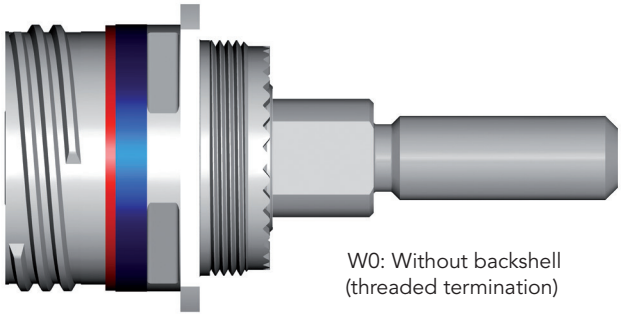

W0: Without backshell (threaded termination)

Dimensions

Plug & receptacles

8D0 Square flange receptacle

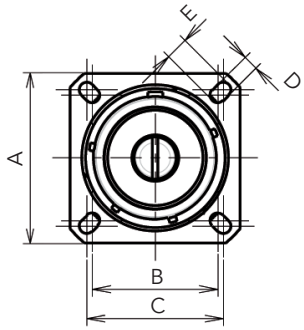

8D5 Plug

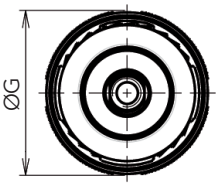

8D7 Jam nut receptacle

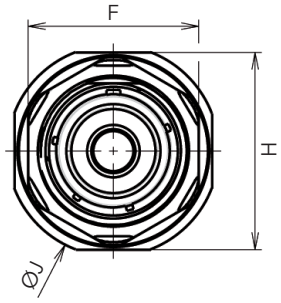

Shell size	A±0.1	B±0.1	C±0.1	D±0.1	E±0.1	F Max	ØG Max	H±0.25	ØJ±0.25
19	36.5	26.97	29.36	3.29	4.98	41	38.5	45.95	49.15
23	42.9	31.75	34.93	3.96	6.2	47	44.9	52.35	55.55
25	46	34.93	38.1			52	48	55.55	58.65

Note: All dimensions are in millimeters (mm)

Dimensions

Backshell D1 type

With 8D0 (square flange receptacle)

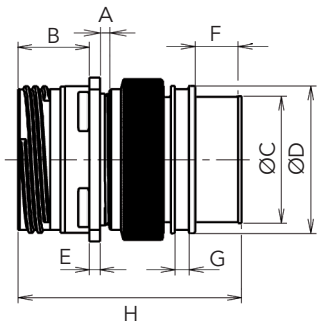

With 8D5 (plug)

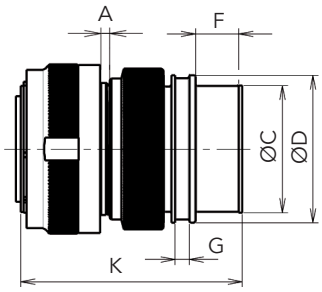

With 8D7 (jam nut receptacle)

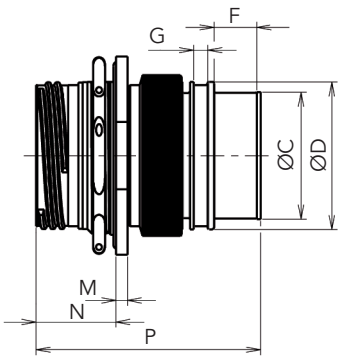

Shell size	A Max	B Max	ØC±0.1	ØD±0.1	E±0.1	F±0.2	G±0.2	H Max	K Max	M±0.25	N Max	P Max
19	2.65	20.9	25.6	31.6	2.26	12	4	62.5	62	3.25	22.8	63
23		20.1	32.4	38.6	2.97							
25			35.6	42.1								

Backshell R1 type

With 8D0 (square flange receptacle)

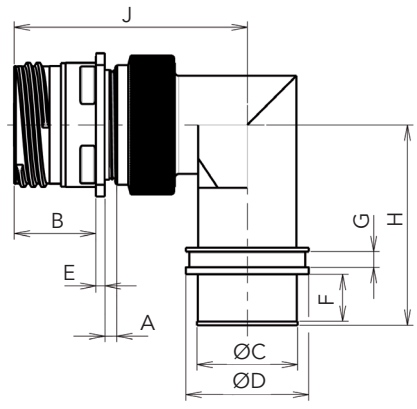

With 8D5 (plug)

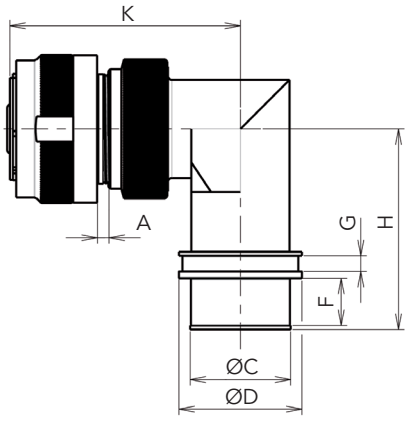

With 8D7 (jam nut receptacle)

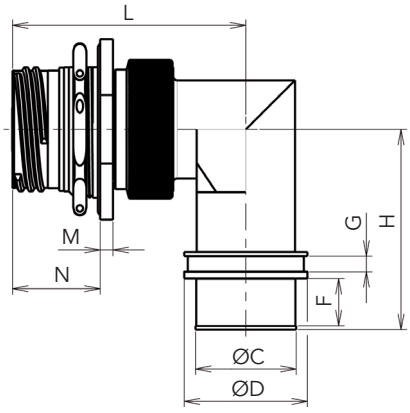

Shell size	A Max	B Max	ØC±0.1	ØD±0.1	E±0.1	F±0.2	G±0.2	H Max	J Max	K Max	L Max	M±0.25	N Max
19	2.85	20.9	25.6	31.3	2.26	12	4	51.1	59.8	59.3	59.8	3.25	22.8
23		20.1	32.4	38.1	2.97			54.4	63.2	62.7	63.2		
25			35.6	41.3				56.1	64.8	64.3	64.8		

Note: All dimensions are in millimeters (mm)

Dimensions

Backshell G0 type

With 8D0
(square flange receptacle)

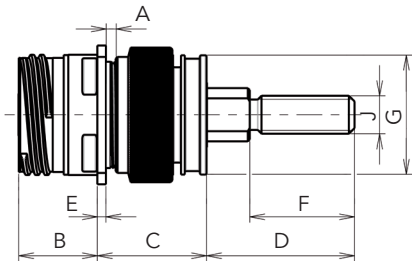

With 8D5
(plug)

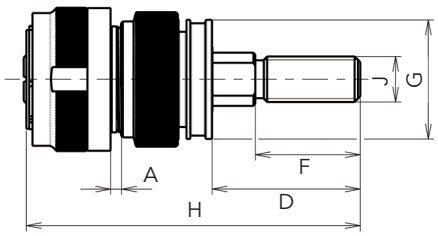

With 8D7
(jam nut receptacle)

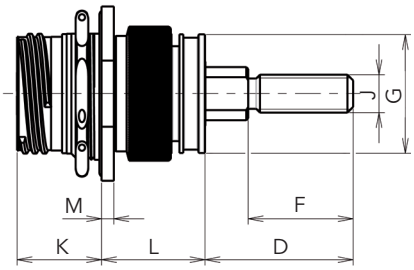

Shell size	A Max	B Max	C Max	D Max	E±0.1	F±0.2	ØG±0.1	H Max	J Max	K Max	L Max	M±0.25
19	2.65	20.9	29	39.4	2.26	25	31.3	88.1	M12 x 1.75	22.6	27.6	3.25
23		20.1	29.8		2.97		38.1				28.4	
25							41.3					

Backshell W0 type

With 8D0
(square flange receptacle)

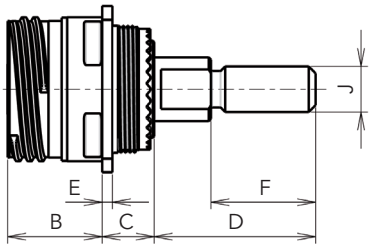

With 8D7
(jam nut receptacle)

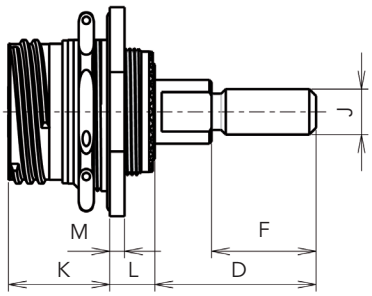

Shell size	B Max	C Max	D Max	E±0.1	F±0.2	J Max	K Max	L Max	M±0.25
19	20.9	14	40	2.26	25	M12 x 1.75	22.6	12	3.25
23	20.1			2.97					
25									

Note: All dimensions are in millimeters (mm)

Description

- Derived from standards:
  - MIL-DTL-38999 Series III (8D)
- 100% scoop proof
- Available in 3 shell sizes
- Contacts #26 for cable AWG 26 to 30 (24 to 30 under request)
- Double flange & clinch nut version available

Technical features

Mechanical

- **Shell:**
  . Aluminium, Composite, Stainless steel
- **Shell palting:**
  . 8D Aluminum:
  Cadmium olive drab (W)
  Nickel (F)
  Black zinc nickel (Z)
  . 8D Composite:
  Cadmium olive drab (J)
  Nickel (M)
- **Insulator:** Thermoplastic
- **Seal:** Liquid Silicone rubber
- **Contact:** Copper alloy
- **Contact plating:** Gold
- **Endurance:** 500 matings/unmatings
- **Shock & Vibration:**
  According to 38999 specification

Electrical

- **Contact resistance:**
  Size 26: 16 mΩ
- **Insultation resitance:**
  ≥5000MΩ (at 500Vdc)
- **Contact rating:**
  Size 26: 3Amp
- **Shell continuity:**
  . Aluminum shell:
  Cadmium olive drab (W): 2.5 mΩ
  Nickel (F): 1 mΩ
  Black zinc nickel (Z): 2.5 mΩ
  . Composite shell:
  Cadmium olive drab (J): 3 mΩ
  Nickel (M): 3 mΩ
  . Stainless steel shell:
  Passivated (K): 10 mΩ
  Nickel (S): 1 mΩ

Environmental

- **Temperature range:**
  -55°c to +175°C
  -55°c to +200°C (Nickel version)
- **Sealing mated connectors:**
  IP 67 (1 metre for 30 min minimum)
- **Salt spray:**
  . Aluminum shell:
  W: 500 Hrs
  F: 48 Hrs
  Z: 500 Hrs
  . Composite shell: 2000 Hrs
  . Stainless steel shell: 500 Hrs

Resistance to fluids

- **According to MIL-DTL-38999 standard**
  . Gasoline: JP5 (OTAN F44)
  . Mineral hydraulic fluid: MIL-H-5606 (OTAN H515)
  . Synthetic hydraulic fluid: Skydrol 500 B4
- **LD4 (SAE AS 1241)**
  . Mineral lubricating: MIL-L-7870A (OTAN 0142)
  . Synthetic lubricating: MIL-L-23699 (OTAN 0156), MIL-L-7808
  . Cleaning fluid: MIL-C-87936 diluted
  . De-icing fluid: MIL-A-8243
  . Extinguishing fluid: Bromochloromethane
  . Cooling fluid: Coolanol

Contact layouts

09	11	13	15
12	26	43	68
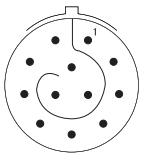	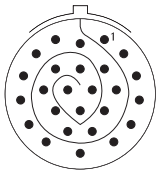	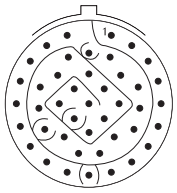	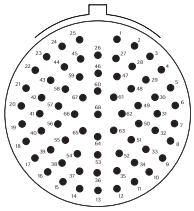
12#26	26#26	43#26	68#26

PCB hole drilling and position information
See pages 76 & 77.

Ordering information

Basic Series	8D	0	-	11	W	26	P	N	
Shell style: **0:** Square flange receptacle **1:** In line receptacle (Aluminum only) **7:** Jam nut receptacle (Aluminum, Stainless steel & Titanium only) **5:** Plug with RFI shielding									
Type: **- :** Connectors with standard crimp contacts **L:** Receptacle with PC tail									
Shell size: 09, 11, 13, 15									
Plating: **W:** Olive drab cadmium (Aluminum only) **F:** Nickel (Aluminum only) **Z:** Black zinc nickel (Aluminum only) **J:** Olive drab cadmium (Composite only) **M:** Nickel (Composite only)									
Contact layout: See above									
Contact type: **P:** Pin **S:** Socket									
Orientation: N, A, B, C, D, E									
Specifications: **L:** Delivered without contact **900** (mandatory for PC tail version): PC tail contacts without shoulder **901** (mandatory for PC tail version): Tin plated PC tail contacts without shoulder									

Contact, tooling & accessories

See «Common Section» page 63.

Recommanded cable

Standard military cable as M22759 or EN2267 and derivated.

Description

- Derived from standard MIL-DTL-38999 Series III
- Plug in 9 sizes (from size 09 to 25)
- Black zinc nickel, cadmium and nickel plating

Technical features

Mechanical

- **Shell:** Aluminum
- **Shell palting:**
  . Nickel (F)
  . Black zinc nickel (Z)
  . Olive drab cadmium: (W)
- **Insulator:** Thermoplastic
- **Seal:** Silicone elastomer
- **Contact:** Copper alloy
- **Contact plating:** Gold over nickel
- **Endurance:** 500 matings/unmatings
- **Shock & Vibration:**
  According to 38999 specification

Electrical

- **Contact resistance:**

Contacts size	22	20	16	12	8	4
Resistance mΩ	14.6	7.3	3.8	3.5	3	2

- **Insulation resitance:**
  ≥5000mΩ (at 500Vdc)
- **Contact rating:**

Contacts size	22	20	16	12	8	4
Rating (A)	5	7.5	13	23	45	80

- **Shell continuity**
  . Nickel (F): 1 mΩ
  . Black zinc nickel (Z): 2.5 mΩ
  . Olive drab cadmium (W): 2.5 mΩ

Environmental

- **Temperature range:**
  -55°c to +175°C (Z & W)
  -55°c to +200°C (F)
- **Sealing mated connectors:**
  IP 67 (1 meter for 30 min minimum)
- **Salt spray:**
  . 48 hours (F)
  . 500 hours (Z & W)

Resistance to fluids

- **According to MIL-DTL-38999 standard**
  . Gasoline: JP5 (OTAN F44)
  . Mineral hydraulic fluid: MIL-H-5606 (OTAN H515)
  . Synthetic hydraulic fluid: Skydrol 500 B4
- **LD4 (SAE AS 1241)**
  . Mineral lubricating: MIL-L-7870A (OTAN 0142)
  . Synthetic lubricating: MIL-L-23699 (OTAN 0156), MIL-L-7808
  . Cleaning fluid: MIL-C-87936 diluted
  . De-icing fluid: MIL-A-8243
  . Extinguishing fluid: Bromochloromethane
  . Cooling fluid: Coolanol

Ordering information

Basic series	**8DA**	**5**	**-**	**13**	**Z**	**35**	**P**	**N**
Shell type: **5:** Plug with RFI shielding								
Style: **-:** Connector with standard crimp contacts								
Shell size: **09, 11, 13, 15, 17, 19, 21, 23, 25**								
Plating: **Z:** Black zinc nickel **F:** Nickel **W:** Olive drab cadmium								
Contact layout: See pages 13 to 17								
Contact type: **P:** Male **S:** Female								
Orientation: **N, A, B, C, D, E**								
L: Without contact								

Note: Power, Quadrax and Optical layouts, please consult us. Type 0 and Type 7 on request.

3D models

8D Integrated Backshell 3D models are available on **www.traceparts.online.net**
Registration is quick and the downloads are free!

Dimensions

Plug Type 5

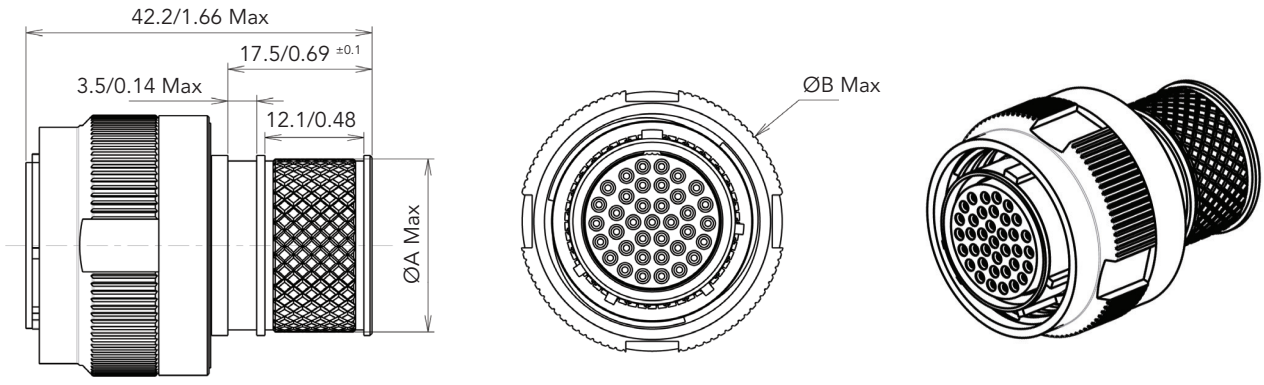

	09	11	13	15	17	19	21	23	25
ØA	11.1/0.44	14.1/0.55	17.1/0.67	21.1/0.83	24.1/0.95	27.1/1.07	30.1/1.18	33.1/1.30	36.1/1.42
ØB	21.8/0.86	25.0/0.98	29.4/1.16	32.5/1.28	35.7/1.41	38.5/1.52	41.7/1.64	44.9/1.77	48.0/1.89

Note: All dimensions are in millimeters (inches) (mm/inch)

Connectors weight - in gram (±15%)

Shell size & layout	9-35	11-35	13-35	15-35	17-35	19-35	21-35	23-35	25-35
Weight with contacts	14.92	20.62	29.82	40.37	48.33	59.51	70.23	82.41	96.86

Accessories & Tooling

Recommended accessories for wiring

Shell size	Shield band (recommended)	Hand banding tool	Rear diameter to fit with boot
9	M85049/128-8 (individualy coiled) M85049/128-7 (not individualy coiled)	85930339A	11.1/0.44
11			14.1/0.55
13			17.1/0.67
15			21.1/0.83
17			24.1/0.95
19			27.1/1.07
21			30.1/1.18
23	M85049/128-3 (not individualy coiled) M85049/128-4 (individualy coiled)	85999346	33.1/1.30
25			36.1/1.42

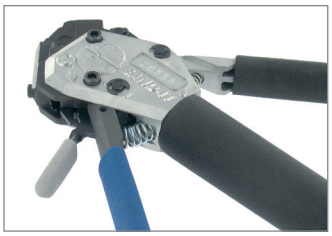

To order braid, boot or other accessories, please contact your SOURIAU distributor.

Shield Band Dimension

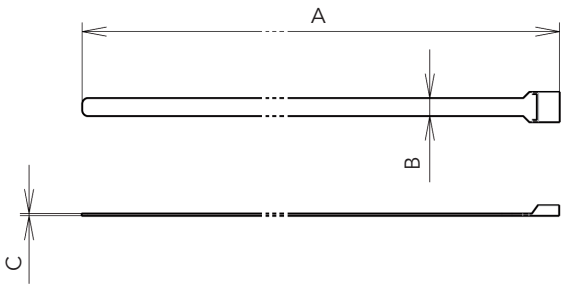

	M85049/128-7 or M85049/128-8	M85049/128-3 or M85049/128-4
A	$206.2^{\pm 1.5}$ / $8.12^{\pm 0.06}$	$362^{\pm 1.5}$ / $14.25^{\pm 0.06}$
B	2.92 / 0.115	6.22 / 2.45
C	0.38 / 0.015	0.48 / 0.019

Note: All dimensions are in millimeters and inches (mm/inch)

Accessories & Tooling

Recommended installation torque

Shell Size	Installation Torque (Inch-Pounds)
09, 11, 13, 15, 17 & 19	40
21, 23 & 25	80

Note: Torque values are based on 80% of the coupling thread strength specified in SAE-AS85049 standard.

Tightening support

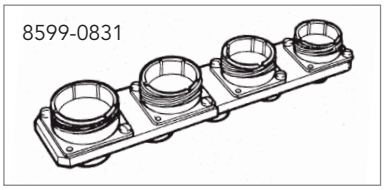

Part number: **8599-0831**
This tool is made up of dummy receptacles housings of all 9 sizes for all key polarisation, and secures free connectors during wiring and fitting of rear accessories.

Crimping tools - for standard contacts

Contact size	Contact type	Contact Part number	Plier M22520/1-01	Plier M22520/2-01 (SOURIAU 8476-01)
			Turret Part number MIL Spec	Locator Part number MIL Spec
#22D	Pin	8599-0702 900	-	M22520/2-09
	Socket	8599-0706 900	-	M22520/2-06
#20	Pin	8599-0703 SA	M22520/1-04	M22520/2-10
	Socket	8599-0707 900		
#16	Pin	8599-0704 MJ	M22520/1-04	-
	Socket	8599-0708 900		-
#12	Pin	8599-0705 MJ	M22520/1-04	-
	Socket	8599-0709 900		-

Insertion & extraction tools - for standard contacts

Contact size	Material	Part number	Color	
			Insertion	Extraction
#22D	Plastic	M81969/14-01	Green	White
#20	Plastic	M81969/14-10	Red	Orange
#16	Plastic	M81969/14-03	Blue	White
#12	Plastic	M81969/14-04	Yellow	White
#10	Plastic	M81969/14-05	Grey	-

Other Accessories, Tooling & Contacts

See "Common Section" page 63.

Description

- Threaded coupling
- Shell sizes from 9 to 25
- Contact protection: 100% Scoop proof
- RFI - EMI shielding and shell-to-shell conductivity
- Contact fretting minimized
- Accessories available (protective caps, backshells, etc…)
- Intermatable with Standards:
  . MIL-DTL-38999 Series III
  . EN3645
  . BACC63DC

Technical features

Mechanical

- **Shell:** Stainless steel
- **Shell plating:**
  Passivated (K)
  Nickel (S)
- **Insulator:** Thermoplastic
- **Grommet and interfacial seal:**
  Silicone elastomer
- **Contacts:** Copper alloy
- **Contacts plating:** Gold over nickel plated
- **Endurance:** 500 mating cycles
- **Shock:**
  300g, 3ms according EN2591-402 method A and EIA-364-27
- **Vibration:**
  Sinusoidal:
  . 10 à 2000 Hz, 3x12 hrs
  (60g, 140 - 2000 Hz) with T° cycling
  Random:
  . 50 to 2000 Hz, 2x8 Hrs
  (1g2/ Hz, 100 - 2000Hz) at T° max.
  . 25 to 2000 Hz, 2x8 Hrs
  (5g2/ Hz, 100 - 300Hz) at ambiant T°
  Test with accessories in accordance with EN2591-403 and EIA-364-28
- **Contact retention:**

Contacts size	22	20	16	12	8	4
Min force in N	44	67	111	111	111	200

Electrical

- **Test voltage rating (Vrms):**

Service	Sea level	21 000 m 70,000 ft
R	400	N/A
M	1 300	800
N	1 000	600
I	1 800	1 000
II	2 300	1 000

- **Contact resistance:**

Contact size	22	20	16	12	8	4
Resistance mΩ	14.6	7.3	3.8	3.5	3	2

- **Insulation resistance:**
  ≥ 5,000 MΩ (under 500 Vdc)
- **Contact rating:**

Contact size	22	20	16	12	8	4
Rating (A)	5	7.5	13	23	45	80

- **Shell continuity:**
  K: 10 mΩ
  S: 1 mΩ
- **Shielding:**
  K: 45 db at 10 GHz
  S: 65 db at 10 GHz

Environmental

- **Temperature range:**
  K: -65°C +200°C
  S: -65°C +200°C
  Peak temperature: 260°C
- **Sealing:**
  Mated connectors meet altitude immersion requirements of MIL-DTL-38999.
- **Salt spray:**
  K: 500 Hrs
  S: 500 Hrs

Resistance to fluids

- **According to MIL-DTL-38999 standard:**
  . Gasoline: JP5 (OTAN F44)
  . Mineral hydraulic fluid: MIL-H-5606 (OTAN H515)
  . Synthetic hydraulic fluid: Skydrol 500 B4
- **LD4 (SAE AS 1241):**
  . Mineral lubricating: MIL-L-7870A (OTAN 0142)
  . Synthetic lubricating: MIL-L-23699 (OTAN 0156), MIL-L-7808
  . Cleaning fluid: MIL-DTL-25769 diluted
  . De-icing fluid: MIL-A-8243
  . Extinguishing fluid: Bromochloromethane
  . Cooling fluid: Coolanol

8DV overview

- Full stainless steel design giving the plug the necessary robustness for harsh environments: vibration, fire resistance, corrosion, temperature peak up to 260°C.
- Coupling with all types of D38999 receptacles and M85049 backshells.
- Reduced contact fretting, contact conductivity guaranteed.
- Security lock with vibration levels beyond D38999 standards values. The lock-on system increases the pressure force between plug and receptacle: excellent electrical conductivity between boxes coupled.
- Easy implementation of rear accessories at high temperatures when harnessed.
- Basic mechanical, electrical and environmental characteristics are identical to stainless steel D38999 connectors.

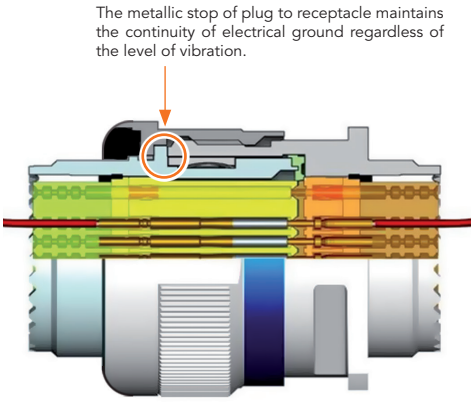

8DV coupling possibilities

8DV Plug

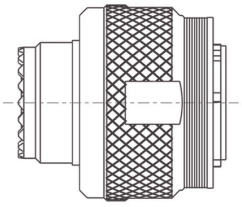

Type 5
Reinforced locking

+

Sealed receptacles

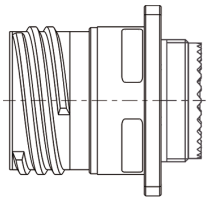

Type 0
Square flange

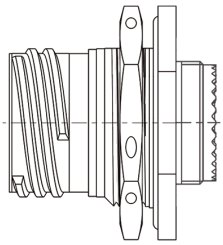

Type 7
Jam nut

or

Hermetic receptacles

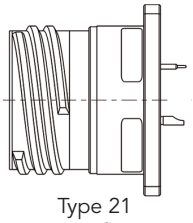

Type 21
Square flange

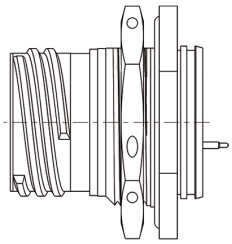

Type 23
Jam nut

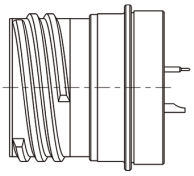

Type 25
Solder mount

or

Dummy receptacle

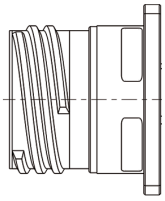

Connector part numbers

Basic Series	8D	V5	11	K	35	P	N			L

Shell style:
V5: Plug with RFI shielding & reinforced locking

Shell size:
09, 11, 13, 15, 17, 19, 21, 23, 25

Plating:
K: Passivated
S: Nickel

Contact layout: See pages 13 to 17

Contact type:
P: Pin
A: Connector supplied less pin contact or with specific contacts (connector marking: A + orientation)
S: Socket
B: Connector supplied less socket contact or with specific contacts (connector marking: B + orientation)

Orientation:
N, A, B, C, D, E

Specification:
251: Connector provided with power contacts (layouts with contact #8)
022: Fuel tank

Special custom:
None: Standard plastic cap
M: Anti-static plastic cap

L: For P or S contact type only, connectors delivered without contacts, connectors marking P or S plus orientation.

Connectors weight - in gram (±10%)

Layout	with contacts		without contacts	
	Male	Female	Male	Female
9-35	32.53	34.11	32.11	32.61
9-98	32.53	33.83	32.11	32.63
11-01	41.53	44.47	40.87	42.87
11-04	41.35	44.41	40.79	42.81
11-05	41.38	44.59	40.68	42.59
11-35	41.28	44.75	40.37	41.50
11-98	41.25	44.01	40.41	41.61
13-04	56.64	60.42	55.40	57.30
13-08	57.02	62.20	55.90	59.00
13-26	57.39	63.04	55.65	58.34
13-35	56.82	62.59	55.28	57.09
13-98	56.68	61.30	55.28	57.30
15-05	68.49	73.83	66.94	69.93
15-15	69.29	76.45	67.02	70.07
15-18	69.50	78.38	66.98	71.18
15-19	69.03	76.76	66.37	69.16
15-35	69.13	78.37	66.54	69.12
15-97	68.96	76.01	66.60	69.69
17-06	73.97	83.57	70.01	73.97
17-08	72.96	81.69	70.48	75.45
17-26	73.54	84.33	69.90	73.93
17-35	73.78	87.33	69.93	73.58
17-75	79.38	90.67	70.38	76.67
17-99	73.59	84.15	70.03	74.19

Layout	with contacts		without contacts	
	Male	Female	Male	Female
19-11	87.99	101.58	84.58	93.00
19-32	87.20	100.60	82.72	87.80
19-35	87.51	103.96	82.89	87.46
21-11	101.71	121.55	94.45	103.95
21-16	98.81	114.09	93.85	101.61
21-35	99.09	119.75	93.56	100.00
21-39	100.47	120.80	94.67	104.44
21-41	99.01	116.38	93.27	99.98
23-21	118.01	141.26	111.50	124.88
23-35	116.37	142.52	109.37	117.52
23-53	116.43	138.62	109.01	117.42
23-55	117.18	140.25	109.48	118.25
25-19	130.34	162.35	117.80	131.95
25-24	129.84	161.20	118.20	132.64
25-29	128.16	157.13	119.17	134.51
25-35	125.95	158.78	116.99	126.78
25-43	128.20	158.88	118.78	134.08
25-46	130.50	154.34	115.86	126.02
25-61	125.25	152.00	116.71	127.60
25-08	151.58	183.41	115.58	127.41
25-20	136.60	166.82	115.03	125.28
25-04	129.00	158.85	119.80	133.41

Dimensions

Plug type 5 reinforced locking (8DV)

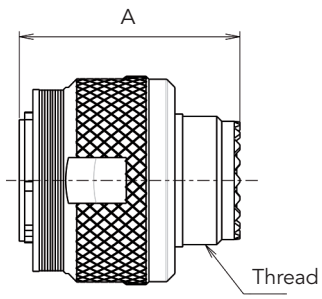

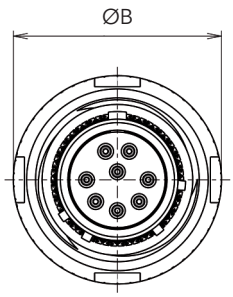

Shell size	A Max	Thread	ØB Max
09 (A)	31.00	M12 x 1-6g	21.80
11 (B)		M15 x 1-6g	25.00
13 (C)		M18 x 1-6g	29.40
15 (D)		M22 x 1-6g	32.50
17 (E)		M25 x 1-6g	35.70
19 (F)		M28 x 1-6g	38.50
21 (G)		M31 x 1-6g	41.70
23 (H)		M34 x 1-6g	44.90
25 (J)		M37 x 1-6g	48.00

Mated connectors dimensions

Type 0 with plug

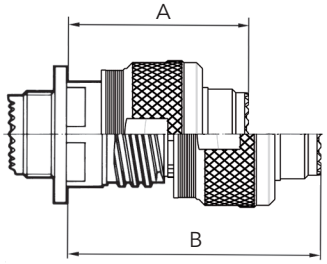

Type 7 with plug

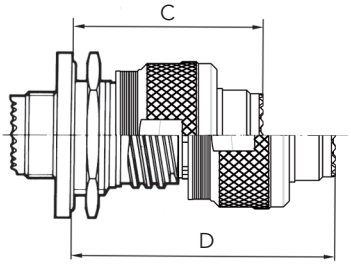

Shell size	A Max	B Max	C Max	D Max
09 (A)	37.00	52.30	38.30	53.60
11 (B)				
13 (C)			38.50	53.80
15 (D)				
17 (E)				
19 (F)				
21 (G)	36.00	51.30		
23 (H)				
25 (J)				

Note: All dimensions are in millimeters (mm)

Description

- Square flange receptacle with 4 clinch nuts or 4 helicoils
- Clinch nut & helicoils are self-locking
- Rear mounting
- Easy to install, time saving
- Equivalent MIL level qualification as 38999 Series III
- Clinch nut & helicoil tested:
  . Impact test (drop 0.4kg from height of 100mm)
  . Push out test (130N during 15s max)
  . Wrench out test (1N/m)

Technical features

Mechanical

- **Shell:** Aluminum
- **Shells plating:**
  Black zinc nickel (Z)
  Cadmium olive drab (W)
  Nickel (F)
- **Insulator:** Thermoplastic
- **Grommet and interfacial seal:**
  Silicone elastomer
- **Contact:** Copper alloy
- **Contact plating:** Gold over nickel plated
- **Endurance:**
  . 500 mating/unmating operations
- **Shock:**
  300g, 3ms
- **Vibration:**
  . Sinus:
  . . 10 à 2000 Hz, 3x12 hrs
  (60g, 140 - 2000 Hz) with T° cycling
  . Random:
  . . 50 to 2000 Hz, 2x8 Hrs
  (1g2/ Hz, 100 - 2000Hz) at T° max.
  . . 25 to 2000 Hz, 2x8 Hrs
  (5g2/ Hz, 100 - 300Hz) at ambiant T°
- **Contact retention:**

Contacts size	26	22	20	16	12	8	4
Min force in N	30	44	67	111	111	111	200

Electrical

- **Test voltage rating (Vrms)**

Service	sea level	at 21000 m
R	400	N/A
M	1 300	800
N	1 000	600
I	1 800	1 000
II	2 300	1 000

- **Contact resistance**

Contacts size	26	22	20	16	12	8	4
Resistance mΩ	16	14.6	7.3	3.8	3.5	3	2

- **Insulation resistance:**
  ≥ 5 000 MΩ (under 500 Vdc)
- **Contact rating:**

Contacts size	26	22	20	16	12	8	4
Rating (A)	3	5	7.5	13	23	45	80

- **Shell continuity**
  Black zinc nickel (Z): 2.5 mΩ
  Cadmium olive drab (W): 2.5 mΩ
  Nickel (F): 1 mΩ
- **Shielding:**
  F: 65 db at 10 GHz
  Z, F & W: 85 db at 1 GHz
  Z & W: 50 db at 10 GHz

Environmental

- **Temperature range:**
  W: -65°C +175°C
  Z & F: -65°C +200°C
- **Sealing:**
  Mated connectors meet altitude immersion requirements of MIL-DTL-38999.
- **Salt spray:**
  Z & W: 500 Hours
  F: 48 Hours

Resistance to fluids

- **According to MIL-DTL-38999 standard**
  . Gasoline: JP5 (OTAN F44)
  . Mineral hydrolic fluid: MIL-H-5606 (OTAN H515)
  . Synthetic hydraulic fluid: Skydrol 500 B4
- **LD4 (SAE AS 1241)**
  . Mineral lubricating: MIL-L-7870A (OTAN 0142)
  . Synthetic lubricating: MIL-L-23699 (OTAN 0156), MIL-L-7808
  . Cleaning fluid: MIL-C-87936 diluted
  . De-icing fluid: MIL-A-8243
  . Extinguishing fluid: Bromochloromethane
  . Cooling fluid: Coolanol

Ordering information

Basic Series	8D	34	-	19	F	35	S	N

Shell style:
34: Square flange receptacle with M3 clinch nuts, F & W only
35: Square flange receptacle with M3 helicoils, Z only
37: Square flange receptacle with UNC 4-40 helicoils, Z only
39: Square flange receptacle with UNC 4-40 clinch nuts, F & W only

Contact lenght: (consult us)
- : Connectors with standard crimp contacts
C: Short PC tail
L: Long PC tail

Shell size:
9 - 11 - 13 - 15 - 17 - 19 - 21 - 23 - 25

Plating:
Z: Black zinc nickel
F: Nickel
W: Olive green cadmium

Contact layout:
See pages 13 to 17

Contact type:
P: Pin
S: Socket

Orientation:
N, A, B, C, D, E

Specification:
046: Tin plated PC tail contact SnPb
046E: Tin plated PC tail contact Sn pure
046S: Tin plated PC tail contact SAC305
900: Contact without shoulder (gold plated)
901: Tin plated PC tail contact without shoulder SnPb
901E: Tin plated PC tail contact without shoulder Sn pure
901S: Tin plated PC tail contact without shoulder SAC305

Dimensions

Mounted connectors (with 8D5 connector)

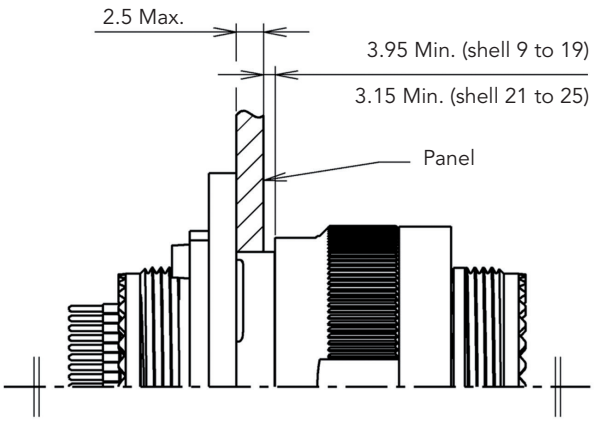

Note: All dimensions are in millimeters (mm)

Dimensions

Square flange receptacle - type 34 & type 39

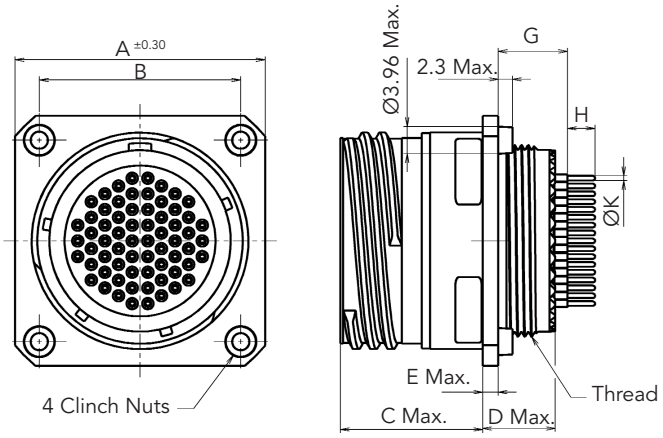

Shell Size	A ±0.3	B	C Max	D Max	E Max	Thread
9	27.79	18.26	20.90	10.60	2.50	M12x1-6g
11	30.15	20.62				M15x1-6g
13	32.54	23.01				M18x1-6g
15	34.14	24.61				M22x1-6g
17	36.5	26.97				M25x1-6g
19	38.89	29.36				M28x1-6g
21	41.27	31.75	20.10	11.40	3.20	M31x1-6g
23	44.45	34.93				M34x1-6g
25	47.62	38.1				M37x1-6g

Short contact length

Min / Max - For other length please consult us

Shell size	G					H		K	
	#22D		#20		#16	#22D	#20 & #16	#22D & #20	#16
	P	S	P	S	P & S	P & S	P & S	P & S	P & S
9 to 19	9.47 / 10.54	9.09 / 10.54	9.64 / 10.71	9.26 / 10.71	9.64 / 10.75	3.8 / 4.0	4.9 / 5.1	0.65 / 0.70	1.09 / 1.15
21 to 25	9.58 / 10.65	9.20 / 10.65	9.75 / 10.82	9.37 / 10.82	9.75 / 10.86				

Square flange receptacle - type 35 & type 37

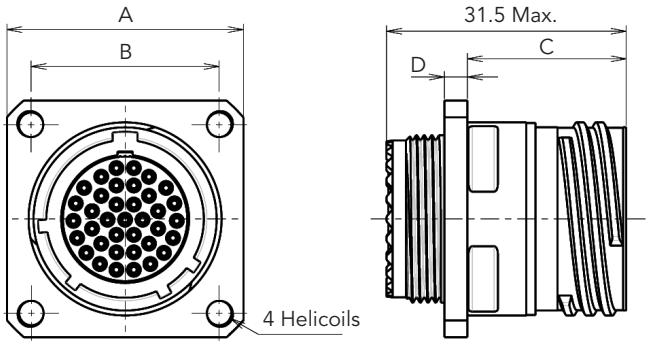

Shell Size	A	B	C	D
9	23.8	18.26	20.83	4
11	26.2	20.62		
13	28.6	23.01		
15	31	24.61		
17	33.3	26.97		
19	36.5	29.36		
21	39.7	31.75	20.07	
23	42.9	34.93		
25	46	38.1		

Short contact length

Please contact us.

Note: All dimensions are in millimeters (mm)

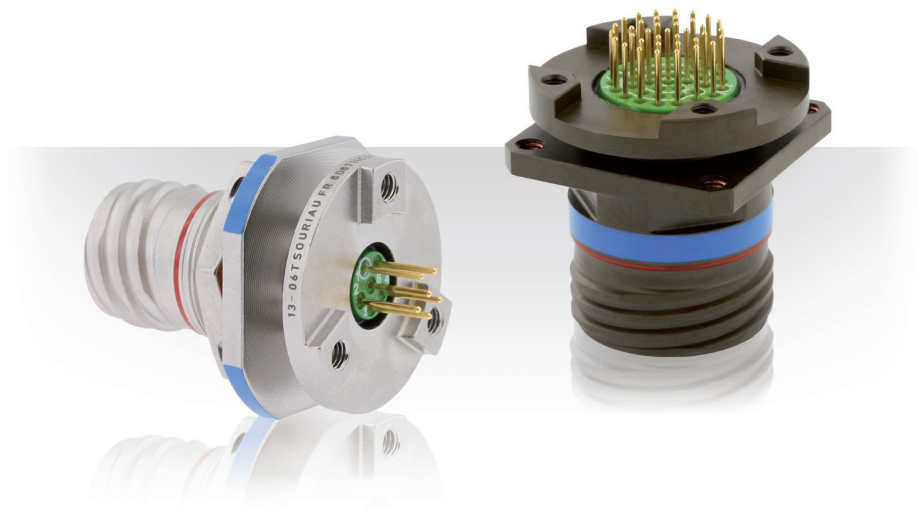

Description

- High level vibration resistance in harsh environments
- Offers the same level of performance as the MIL-DTL-38999 Series III connector
- Jam nut or square flange receptacle
- No risk of breaking contacts
- No risk of micro-cuts
- Allow direct grounding from PCB to the flange
- PC tails contacts without shoulder: #16, #20 and #22
- Resin sealed version, please consult us

Technical features

Mechanical

- **Shell:** Aluminum
- **Shell plating:**
  . Cadmium olive drab (W)
  . Nickel (F)
  . Black zinc nickel (Z)
- **Insulator:** Thermoplastic
- **Grommet and interfacial seal:**
  Silicone elastomer
- **Contacts:** Copper alloy
- **Contacts plating:** Gold over nickel plated
- **Endurance:** 500 mating cycles
- **Shock:**
  300g, 3ms
- **Vibration:**
  . Sinus:
  . 10 à 2000 Hz, 3x12 hrs
  (60g, 140 - 2000 Hz) with T° cycling
  . Random:
  . 50 to 2000 Hz, 2x8 Hrs
  (1g2/ Hz, 100 - 2000Hz) at T° max.
  . 25 to 2000 Hz, 2x8 Hrs
  (5g2/ Hz, 100 - 300Hz) at ambiant T°
- **Contact retention:**

Contacts size	22	20	16	12
Min force in N	44	67	111	111

Electrical

- **Test voltage rating (Vrms)**

Service	sea level	at 21000 m
M	1 300	800
N	1 000	600
I	1 800	1 000
II	2 300	1 000

- **Contact resistance**

Contacts size	22	20	16	12
Resistance mΩ	14.6	7.3	3.8	3.5

- **Insulation resistance:**
  ≥ 5 000 MΩ (under 500 Vdc)
- **Contact rating:**

Contacts size	22	20	16	12
Rating (A)	5	7.5	13	23

- **Shell continuity:**
  . Cadmium olive drab (W): 2.5 Ωh
  . Nickel (F): 1 Ωh
  . Black zinc nickel (Z): 2.5 Ωh
- **Shielding:**
  . F: 65 db at 10 GHz; 85 db at 1 GHz
  . W: 50 db at 10 GHz
  . Z: Consult us

Environmental

- **Temperature range:**
  . W: -65°C +175°C
  . F: -65°C +200°C
  . Z: -65°C +200°C
- **Sealing:**
  Mated connectors meet altitude immersion requirements of MIL-DTL-38999.
- **Salt spray:**
  . W: 500 Hrs
  . F: 48 Hrs
  . Z: 500 Hrs

Resistance to fluids

- **According to MIL-DTL-38999 standard**
  . Gasoline: JP5 (OTAN F44)
  . Mineral hydrolic fluid: MIL-H-5606 (OTAN H515)
  . Synthetic hydraulic fluid: Skydrol 500 B4
- **LD4 (SAE AS 1241)**
  . Mineral lubricating: MIL-L-7870A (OTAN 0142)
  . Synthetic lubricating: MIL-L-23699 (OTAN 0156), MIL-L-7808
  . Cleaning fluid: MIL-C-87936 diluted
  . De-icing fluid: MIL-A-8243
  . Extinguishing fluid: Bromochloromethane
  . Cooling fluid: Coolanol

Ordering information

Basic Series	8D	87	11	C	17	W	35	P	N	L

Shell type:
80: Square flange receptacle
87: Jam nut receptacle

Length between panel & PCB (in mm) For other length, please consult us.

Type:
C: Receptacle with short PC tail
L: Receptacle with long PC tail

Shell size: 09, 11, 13, 15, 17, 19, 21, 23, 25

Plating:
W: Olive green cadmium
F: Nickel (RoHS)
Z: Zinc nickel (RoHS)

Contact layout: Consult us for available layouts

Contact type:
P: Pin
S: Socket

Orientation: N, A, B, C, D, E

Specification:
None: Standard
L: Without contacts
For other specification, please contact us

046: Tin plated PC tail contact SnPb
046E: Tin plated PC tail contact Sn pure (RoHS)
046S: Tin plated PC tail contact SAC305 (RoHS)

Dimensions

Jam nut receptacle (type 87)

Sizes 9 & 11

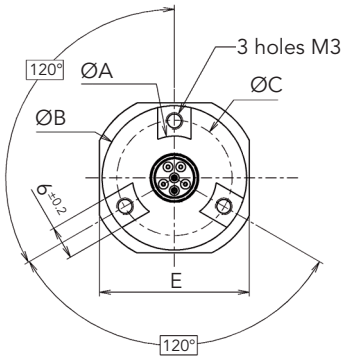

Sizes 13 to 25

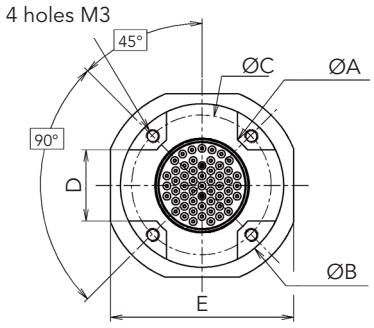

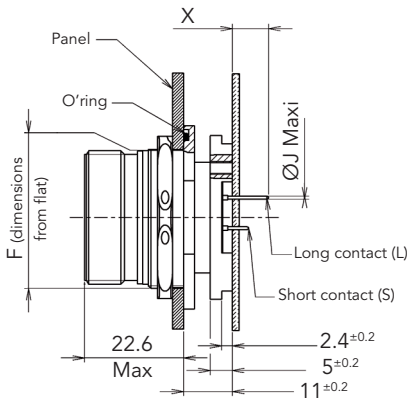

Shell size	ØA ± 0.15	ØB ± 0.15	ØC	D +0.2 -0	E ± 0.4	F +0.1 -0.15
9	15.10	26.00	20.50	-	27.00	16.53
11	19.90	30.80	25.20	-	31.80	19.07
13	19.90	30.80	25.25	12	34.90	23.82
15	23.00	33.90	28.42	14	38.10	26.97
17	26.00	36.80	31.42	16	41.30	30.15
19	29.50	40.40	35.03	18	46.00	33.32
21	32.50	43.20	37.82	20	49.20	36.50
23	35.50	46.50	41.12	23	52.40	39.67
25	38.60	49.60	44.30	25	55.60	42.85

Contact size	Contact type	PC tail length	Size 09 & 11	Size 13 to 25	ØJ max
			X Min	X Min	
22D	M & F	Long	7.1	7.1	0.7
	M & F	Short	3.6	3.6	
20	M & F	Long	7.1	7.1	0.9
	M & F	Short	3.6	4.2	
16	M & F	Long	7.1	7.1	1.35
	M & F	Short	3.6	4.2	
12	M & F	Long	6.76	5.6	1.35
	M & F	Short	3.76	2.6	

Note: All dimensions are in millimeters (mm)

Dimensions

Square flange receptacle (type 80)

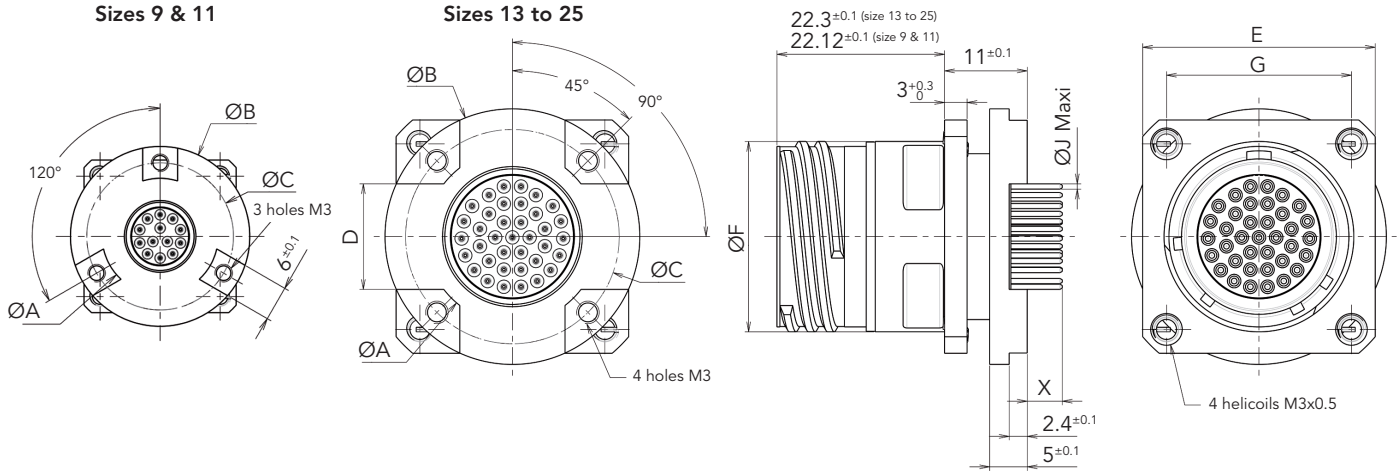

Shell size	ØA ± 0.1	ØB ± 0.1	ØC ± 0.1	D ± 0.1	E ± 0.2	ØF ± 0.1	G ± 0.1
9	15.1	26	20.5	-	23.75	15.67	18.26
11	19.9	30.8	25.2	-	26.14	18.67	20.62
13	19.9	30.8	25.25	12	28.55	22.07	23.01
15	23	33.9	28.42	14	30.94	25.25	24.61
17	26	36.8	31.42	16	33.25	30	26.97
19	29.5	40.4	35.03	18	36.45	31.57	29.36
21	32.5	43.2	37.82	20	39.65	34.75	31.75
23	35.5	46.5	41.12	23	42.85	37.92	34.93
25	38.6	49.6	44.3	25	45.95	41.1	38.1

Note: All dimensions are in millimeters (mm)

Contact size	Contact type	PC tail length	Size 09 & 11 X Min	Size 13 to 25 X Min	ØJ max
22D	M	Long	7.39	7.21	0.70
		Short	4.39	4.21	
	F	Long	7.12	6.94	
		Short	4.12	3.94	
20	M	Long	7.39	7.21	0.90
		Short	4.39	4.21	
	F	Long	7.40	7.22	
		Short	4.40	4.22	
16	M	Long	7.39	7.21	1.35
		Short	4.39	4.21	
	F	Long	7.34	7.16	
		Short	4.34	4.16	
12	M	Long	7.40	7.22	1.35
		Short	4.40	4.22	
	F	Long	7.41	7.23	
		Short	4.41	4.23	

Comparison

Before
Risk of breaking contacts
Risk of micro-cuts

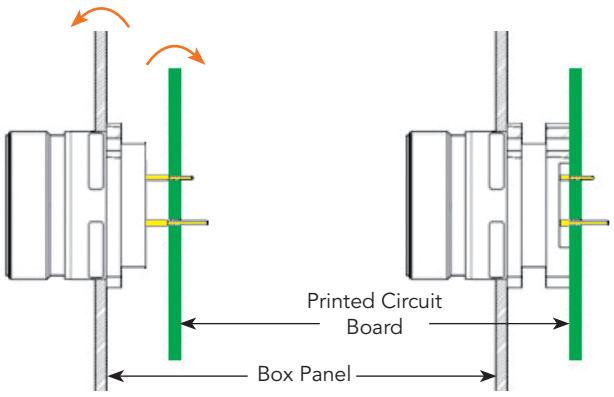

After
Double flange

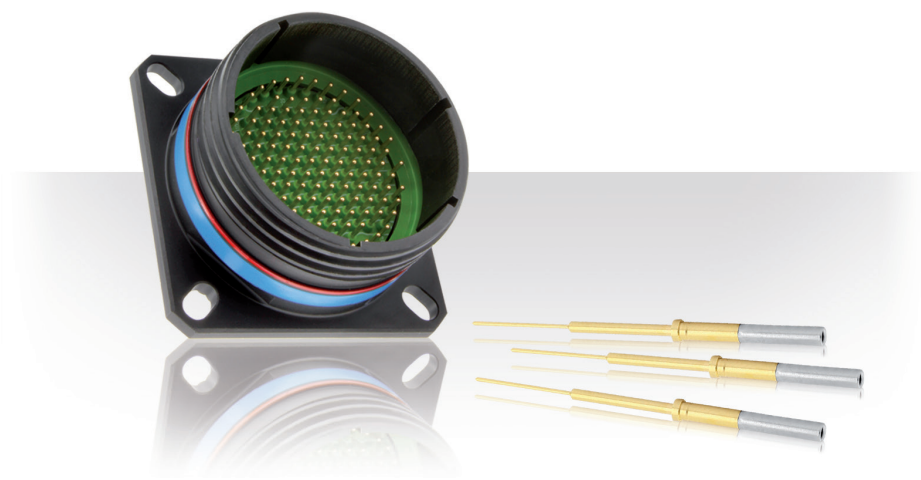

Description

- Pin & socket PCB contacts without shoulder #20 & #22D as per MIL-DTL-38999 Series I, II & III. Contacts without shoulder allows a more flexible mounting on variable PCB thicknesses or depths.
- Ruggedized contacts:
  . Material: copper alloy
  . Finish: gold per MIL-G-45204 type I class 1 over nickel plate
  . Sleeve: stainless steel
- Flexible mounting:
  . Various PCB thicknesses
  . Multiple PCB positioning

Ordering information

8D Series connector with PCB contacts without shoulder

Basic Series:	8D	0	C	11	F	35	P	N	900

Shell type
0: Square flange receptacle
7: Jam nut receptacle
34: Square flange receptacle with M3 clinch nut (F or W plating, aluminum shell only)
35: Square flange receptacle with M3 helicoils (Z plating, aluminum shell only)
37: Square flange receptacle with UNC 4-40 helicoils (Z plating, aluminum shell only)
39: Square flange receptacle with UNC 4-40 clinch nut (F or W plating, aluminum shell only)

PCB contact without shoulder type (see next page for information & dimensions)
C: Short PC tail
M: Medium PC tail
L: Long PC tail

shell size: 09, 11, 13, 15, 17, 19, 21, 23, 25

8D aluminum plating
F: Nickel
Z: Black zinc nickel
W: Olive green cadmium
ZC: Green zinc cobalt

8D stainless steel plating
K: Passivated
S: Nickel

8D composite plating
J: Olive green cadmium
M: Nickel
X: Without plating

8D titanium plating
TT: Without plating
TF: Nickel

Contact layout: See pages 13 to 17

Contact type
P: Male
S: Female

Orientation: N, A, B, C, D, E

Specification
900: Contact without shoulder with gold plated barrel (termination area)
901: Contact without shoulder with tin plated SnPb barrel (termination area)
901E: Contact without shoulder with tin plated Sn pure barrel (termination area)
901S: Contact without shoulder with tin plated SAC305 barrel (termination area)

Special custom
None: Standard plastic cap
M: Antistatic plastic cap

Note: For JVS (8D Bronze Series, please consult us)

Dimensions

Type 0 & type 7

Square flange receptacle
8D0
(8D34 / 8D35 / 8D37 / 8D39)

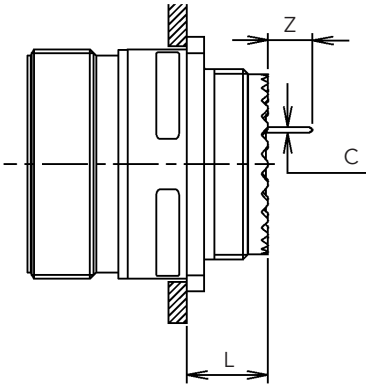

Jam nut receptacle
8D7

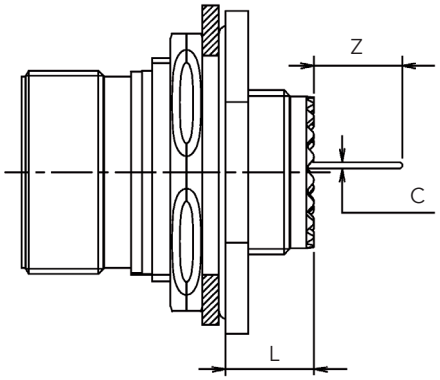

Contact size	Contact Type		Ø C Max	Square flange receptacle 8D0 / 8D34 / 8D35 / 8D37 / 8D39		Jam nut receptacle 8D7	
				Z Min	Z Max	Z Min	Z Max
#22D & #20	Pin	C: Short PC tail	0.50	3.96	4.88	3.56	4.63
		M: Medium PC tail	0.50	5.99	6.91	5.59	6.66
		L: Long PC tail	0.50	7.51	8.43	7.11	8.18
#22D & #20	Socket	C: Short PC tail	0.50	3.96	5.21	3.56	4.81
		M: Medium PC tail	0.50	5.99	7.24	5.59	6.84
		L: Long PC tail	0.50	7.51	8.76	7.11	8.36

Shell type	Square flange receptacle 8D0 / 8D34 / 8D35 / 8D37 / 8D39		Jam nut receptacle 8D7
Shell size	9 to 19	21 to 25	9 to 25
L Max	10.7	11.5	9.90

Note: All dimensions are in millimeters (mm)

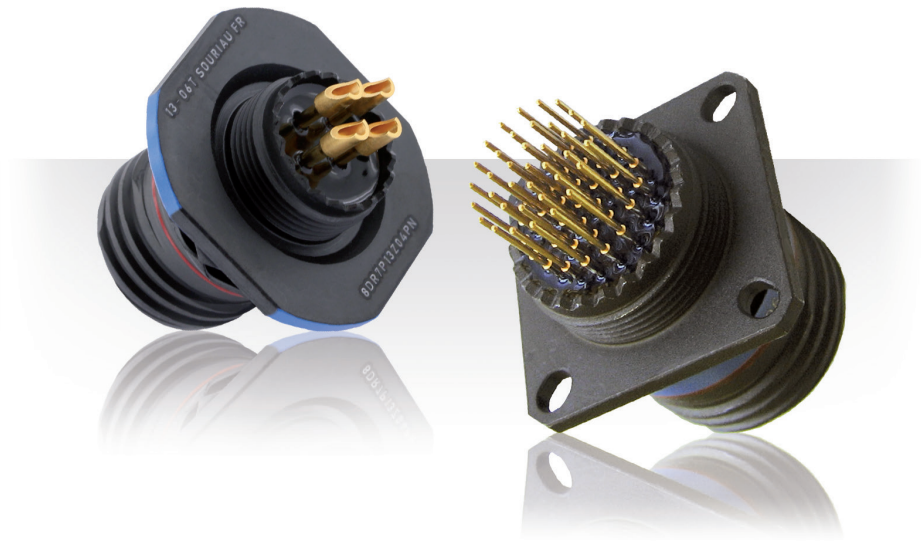

Description

- Reinforced sealed receptacle with male or female straight PC tail contacts
- Strong sealing performance: 10^{-7} atm.cm^3/s
- Designed for unpressurized area
- 125°C max (operational temperature)
- 100 % scoop proof
- Full RoHS solution
- High density connectors
- Weight saving compared to hermetic version
- Other **SOURIAU** ranges on request

Technical features

Mechanical

- **Shell plating:**
  - . 8D aluminum shell:
    - . Black zinc nickel (Z)
    - . Olive drab cadmium (W)
    - . Nickel (F)
  - . 8D composite shell:
    - . Olive drab cadmium (J)
    - . Nickel (M)
  - . 8D stainless steel shell:
    - . Nickel (S)
    - . Passivated (K)
  - . 8D titanium shell:
    - . Nickel (TF)
    - . Without plating (TT)
- **Insulator:** Thermoplastic
- **Interfacial seal:** Silicone elastomer
- **Contacts:** Copper alloy
- **Contacts plating:** Gold over nickel plated
- **Endurance:**
  500 mating/unmating operations

Electrical

- **Contact resistance:**

Contacts size	22	20	16
Resistance mΩ	14.6	7.3	3.8

- **Shielding:**
  - . F; S; TF: 65db - 10GHz
  - . F; Z; W; J; M: 85db - 1GHz
  - . Z; W: 50db - 10GHz
  - . K; TT: 45db - 10GHz
- **Shell continuity:**
  - . F; TF; S: 1mΩ
  - . Z; ZC; W: 2.5mΩ
  - . J; M: 3mΩ
  - . JVS: 5mΩ
  - . TT; K: 10mΩ

Environmental

- **Temperature range:** -55°C +125°C
- **Sealing (initial):** 10^{-7} atm.cm^3/s
- **Salt spray:**
  - . F; S; TF: 48h
  - . Z; W; JVS; TT; K; S: 500h
  - . J; M: 2000h

Ordering information

8D part number

Basic Series:	8DR	0	C	09	Z	35	P	N
Shell type: **0:** Square flange receptacle **1:** In line receptacle (8D aluminum only) **7:** Jam nut receptacle (except 8D Composite)								
Contact type: **C:** Receptacle with short PC tail (male and female #22D, #20, #16, #12) **L:** Connector with long PC tail (male and female #22D) **S:** Connector with specific PC Tail (male and female #22D) **M:** Connector with medium PC tail (male #22D) **P:** Connector with solder cup: . Pin: #22D, #20 & #16; Socket: #12 . Socket: #22D, #20 & #16; Pin: #12 - Please consult us								
Shell size **09, 11, 13, 15, 17, 19, 21, 23, 25**								
Aluminum plating: **F:** Nickel **Z:** Black zinc nickel **W:** Olive drab cadmium **Composite plating:** **J:** Olive drab cadmium **M:** Nickel **Stainless steel plating:** **K:** Passivated **S:** Nickel **Titanium plating:** **TT:** Without plating **TF:** Nickel								
Contact layout See next page								
Contact type: **P:** Male **S:** Female								
Orientation **N, A, B, C, D, E**								

Double flange receptacle available, please consult us.
Receptacle with integrated clinch nuts or helicoils available, please consult us.
Contacts without shoulder available, please consult us.

Contact layouts

For C or L contact type. For other contact type or layouts, please consult us.

09 / A

35

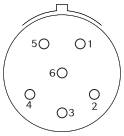

6#22D
Service M

98

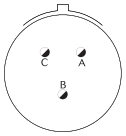

3#20
Service I

11 / B

05

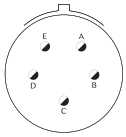

5#20
Service I

35

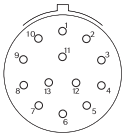

13#22D
Service M

13 / C

35

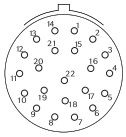

22#22D
Service M

98

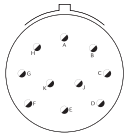

10#20
Service I

15 / D

18

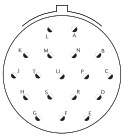

18#20
Service I

35

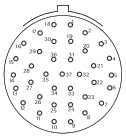

37#22D
Service M

97

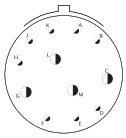

4#16
8#20
Service I

17 / E

26

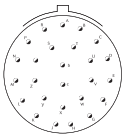

26#20
Service I

35

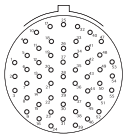

55#22D
Service M

19 / F

35

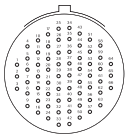

66#22D
Service M

21 / G

35

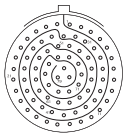

79#22D
Service M

23 / H

35

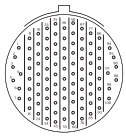

100#22D
Service M

25 / J

35

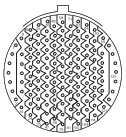

128#22D
Service M

61

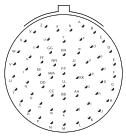

61#20
Service I

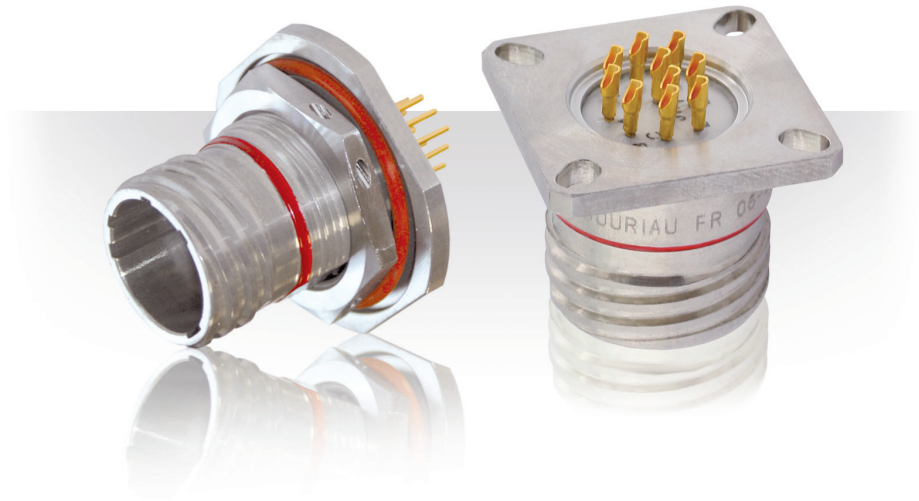

Description

- Thread coupling connector
- MIL-DTL-38999 Series III qualified
  EN3645 compliant
- Glass sealed hermetic:
  . high hermeticity perfomance
  . compact low profile
- Various mounting styles:
  . compact solder mount receptacle
  . easy to install square flange receptacle
  . easy to replace jam nut receptacle
- Signal and power contacts - up to size #4
- Special fuel tank versions for long term fuel immersion
- 230V qualified versions where higher voltage is used to reduce cable weight
- Solder cup, PC tail or eyelet contacts

Technical features

Mechanical

- **Shell:**
  Class Y: passivated stainless steel
  Class N: nickel plated stainless steel
- **Seals:**
  Silicone elastomer
- **Contact:**
  Gold plated ferrous alloy
- **Endurance:**
  500 mating/unmating operations

Electrical

- **Max current rating per contact:**

Contact size	22D	20	16	12	8	4
Rating (A)	3	5	10	17	33	60

- **Dielectric withstanding voltage:**

Service	Sea level	30 000 m
M	1 300 Vrms	800 Vrms
I	1 800 Vrms	1 000 Vrms
II	2 300 Vrms	1 000 Vrms

- **Insulation resistance:**
  5000 MΩ (under 500 Vdc)

Environmental

- **Operating temperature:**
  -65°C to 200°C
- **Hermeticity:**
  Leak rate < 1.10^{-7} atm.cm^3/s
  (helium gas test)
- **Salt spray:**
  Class Y: 500 hours
  Class N: 48 hours

Contact layouts

See pages 13 to 19.

Contact layouts (matrix)

Shell size	Layout	D38999 QPL	8D type 21 Spec. 600*	8D Spec. 022*	8D Spec. 840 & 850*	8D Spec. A76*	Number of contacts					
							#22D	#20	#16	#12	#8	#4
09 / A	09-35	Q		OK	OK		6					
	09-98	Q		OK	OK			3				
11 / B	11-02	Q			OK				2			
	11-04	Q			OK			4				
	11-05	Q			OK			5				
	11-12	OK	Available on request, please consult us							1		
	11-22	OK	Available on request, please consult us				4					
	11-35	Q		OK	OK	OK	13					
	11-98	Q			OK			6				
	11-99	Q		OK	OK			7				
13 / C	13-03	OK	Available on request, please consult us						3			
	13-04	Q	OK		OK				4			
	13-08	Q			OK			8				
	13-26	OK	Available on request, please consult us				6			2		
	13-35	Q		OK	OK		22					
	13-98	Q			OK			10				
15 / D	15-05	Q	Available on request, please consult us						5			
	15-15	Q	Available on request, please consult us					14	1			
	15-18	Q			OK			18				
	15-19	Q		OK	OK			19				
	15-35	Q		OK	OK	OK	37					
	15-97	Q	Available on request, please consult us					8	4			
17 / E	17-06	Q	OK	OK						6		
	17-08	Q	OK		OK				8			
	17-20	OK	Available on request, please consult us				16			4		
	17-26	Q			OK			26				
	17-35	Q		OK	OK	OK	55					
	17-99	Q	Available on request, please consult us					21	2			
19 / F	19-11	Q	Available on request, please consult us						11			
	19-28	Q	Available on request, please consult us					26	2			
	19-32	Q	Available on request, please consult us					32				
	19-35	Q			OK		66					
21 / G	21-11	Q								11		
	21-16	Q	Available on request, please consult us						16			
	21-35	Q		OK	OK		79					
	21-39	Q	Available on request, please consult us					37	2			
	21-41	Q			OK			41				
	21-48	OK	OK								4	
	21-59	OK	Available on request, please consult us				55			4		
23 / H	23-21	Q			OK				21			
	23-32	Q	Available on request, please consult us					32				
	23-35	Q			OK		100					
	23-53	Q			OK			53				
	23-54	OK	Available on request, please consult us				40		9	4		
	23-55	Q			OK			55				
25 / J	25-04	Q			OK			48	8			
	25-19	Q								19		
	25-24	Q	Available on request, please consult us						12	12		
	25-29	Q			OK				29			
	25-35	Q	Available on request, please consult us				128					
	25-37	Q	Available on request, please consult us						37			
	25-43	Q	Available on request, please consult us					23	20			
	25-44	OK	Available on request, please consult us						4			4
	25-61	Q	Available on request, please consult us					61				

OK = SOURIAU's layout
Q = SOURIAU's qualified layout
* see next page for specifications details

Connector part numbers

MIL-DTL-38999 part number

Basic Series	D38999	21	Y	A	35	P	N
Shell style: **21:** Square flange receptacle **23:** Jam nut receptacle **25:** Solder mount receptacle **27:** Weld mount receptacle							
Class: **Y:** Passivated stainless steel **N:** Nickel plated stainless steel							
Shell size: 09=**A**, 11=**B**, 13=**C**, 15=**D**, 17=**E**, 19=**F**, 21=**G**, 23=**H**, 25=**J**							
Contact layout: See pages 13 to 19							
Contact type: **P:** Male solder cup **C:** Male PC tail contacts **X:** Male eyelet contacts							
Orientation: **N, A, B, C, D, E**							

SOURIAU part number

Basic Series	8D	0	Y	13	35	P	N	022
Shell style: **0:** Square flange receptacle **1:** Solder mount receptacle **4:** Weld mount receptacle **7:** Jam nut receptacle								
Class: **Y:** Passivated stainless steel **N:** Nickel plated stainless steel								
Shell size: **09, 11, 13, 15, 17, 19, 21, 23, 25**								
Contact layout: See pages 13 to 19								
Contact type: **P:** Male solder cup **C:** Male PC tail contacts **X:** Male eyelet contacts								
Orientation: **N, A, B, C, D, E**								
Specification: **022:** Fuel tank version **840:** Short PCB contact **850:** Long PCB contact **600:** 230V qualified connector (layouts 13-04, 17-06, 17-08 & 21-48 - orientation T & V) **A73:** Tin plating on contacts rear side and gold plating on contacts front side **A76:** Fuel tank version with crimp removable contacts - Jam nut only								

Dimensions

Square flange receptacle (type 21)

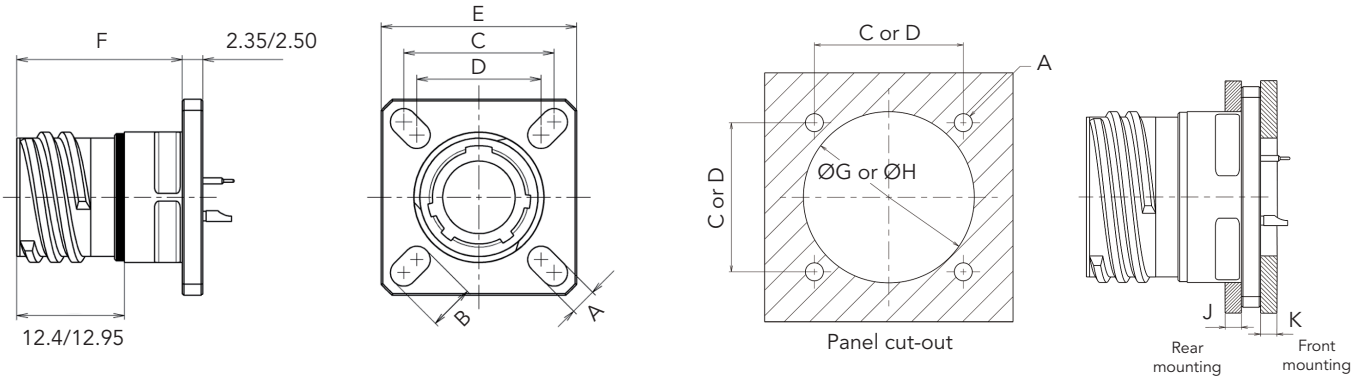

Shell size	A ± 0.20	B ± 0.20	C	D	E ± 0.30	F max	ØG Front mounting	ØH Rear mounting	J max	K max
A (9)	3.25	5.49	18.26	15.09	23.80	20.40	13.11	16.66	2.5	3.2
B (11)		4.93	20.62	18.26	26.20		15.88	20.22		
C (13)			23.01	20.62	28.60		19.05	23.42		
D (15)		4.39	24.61	23.01	31.00		23.01	26.59		
E (17)		4.93	26.97	24.61	33.30		25.81	30.96		
F (19)			29.36	26.97	36.50		28.98	32.94		
G (21)			31.75	29.36	39.70		32.16	36.12		
H (23)	3.91	6.15	34.93	31.75	42.90		34.93	39.29		
J (25)			38.10	34.93	46.00		37.69	42.47		

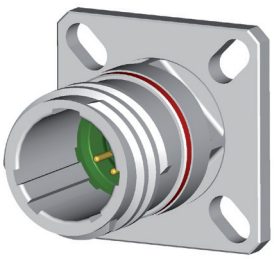

Solder mounting receptacle (type 25)

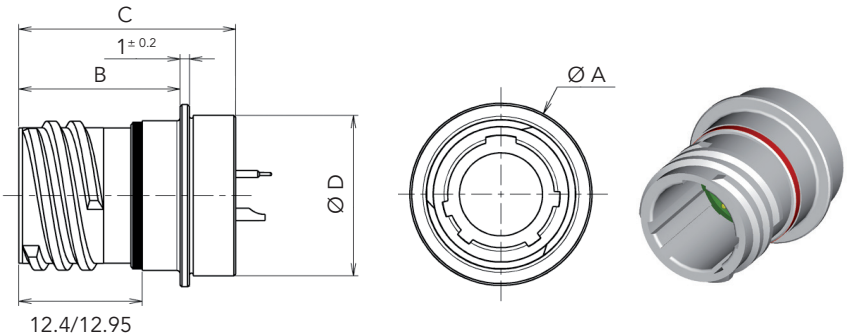

Shell size	Ø A max	B max	C max	D max
A (9)	19.40	17.20	23.80	17.10
B (11)	21.80			19.90
C (13)	24.90			23.10
D (15)	28.10			26.20
E (17)	31.30			29.40
F (19)	33.60			31.80
G (21)	36.80			35.00
H (23)	40.00		24.60	38.20
J (25)	43.20			41.30

Note: All dimensions are in millimeters (mm)

Dimensions

Jam nut receptacle (type 23)

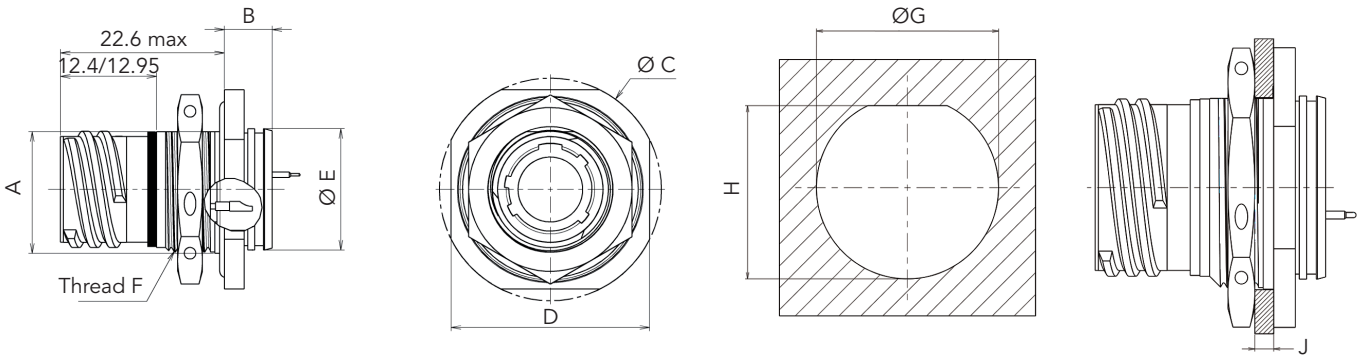

Shell size	A flat $^{+0.10}_{-0.15}$	B max	ØC ± 0.30	D ± 0.40	ØE ± 0.30/0	F thread	ØG $^{+0}_{-0.25}$	H $^{+0.25}_{-0}$	J
A (9)	16.53	9.10	30.20	27.00	16.30	M17 x 1-6g	17.60	16.70	3.2
B (11)	19.07		34.90	31.80	19.40	M20 x 1-6g	20.96	19.59	
C (13)	23.82		38.10	34.90	22.70	M25 x 1-6g	25.65	24.26	
D (15)	26.97		41.30	38.10	25.90	M28 x 1-6g	28.83	27.56	
E (17)	30.15		44.50	41.30	29.00	M32 x 1-6g	32.01	30.73	
F (19)	33.32	9.70	49.20	46.00	32.20	M35 x 1-6g	35.18	33.91	
G (21)	36.50		52.40	49.20	35.40	M38 x 1-6g	38.35	37.08	
H (23)	39.67		55.60	52.40	38.60	M41 x 1-6g	41.53	40.26	
J (25)	42.85		58.70	55.60	41.70	M44 x 1-6g	44.70	43.43	

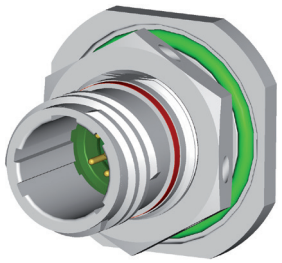

Weld mounting receptacle (type 27)

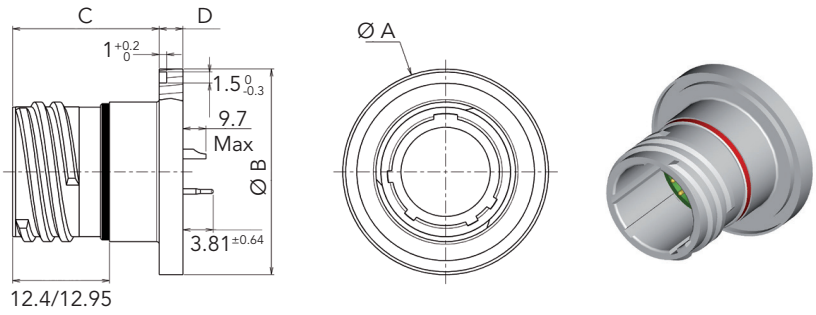

Shell size	Ø A $^{+0.3}_{-0}$	Ø B ±0.3	C max	D ±0.2
A (9)	24.70	23.90	23.20	3.20
B (11)	27.80	27.00		
C (13)	31.00	30.20		
D (15)	34.20	33.40		
E (17)	36.40	35.60		
F (19)	40.10	39.30		
G (21)	43.70	42.90		
H (23)	47.90	47.10	24.00	4.00
J (25)	50.10	49.30		

Note: All dimensions are in millimeters (mm)

Orientations

Orientations

Viewed from front face of receptacle

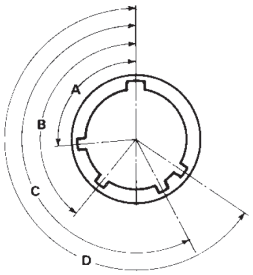

Viewed from front face of plug

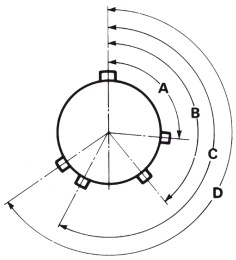

Shell size	Angles	N	A	B	C	D	E	T	V
9 (A)	A° B° C° D°	105 140 215 265	102 132 248 320	80 118 230 312	35 140 205 275	64 155 234 304	91 131 197 240	-	-
11 (B) 15 (D)	A° B° C° D°	95 141 208 236	113 156 182 292	90 145 195 252	53 156 220 255	119 146 176 298	51 141 184 242	-	-
13 (C)	A° B° C° D°	95 141 208 236	113 156 182 292	90 145 195 252	53 156 220 255	119 146 176 298	51 141 184 242	70 136 218 261	75 138 224 268
17 (E) 21 (G)	A° B° C° D°	80 142 196 293	135 170 200 310	49 169 200 244	66 140 200 257	62 145 180 280	79 153 197 272	58 162 188 316	85 150 191 307
19 (F) 23 (H) 25 (J)	A° B° C° D°	80 142 196 293	135 170 200 310	49 169 200 244	66 140 200 257	62 145 180 280	79 153 197 272	-	-

Maximum connector weight (in grams)

Shell size	Square flange receptacle	Jam nut receptacle	Solder mount receptacle
09 (A)	23	39	21
11 (B)	28	53	25
13 (C)	35	63	31
15 (D)	41	73	38
17 (E)	57	92	53
19 (F)	60	106	55
21 (G)	65	118	57
23 (H)	75	132	68
25 (J)	91	154	83

Gaskets & O'rings

Shell size	Gasket for receptacle Type 0 (not delivered with connector)		O ring for receptacle Type 7 (delivered with connector)	
	Part number	Material	Part number	Material
09 (A)	85995541	Fluorosilicone	AS3582-019	Silicone
11 (B)	85995542	Fluorosilicone	AS3582-022	Silicone
13 (C)	85995543	Fluorosilicone	AS3582-024	Silicone
15 (D)	85995544	Fluorosilicone	AS3582-026	Silicone
17 (E)	85995545	Fluorosilicone	AS3582-028	Silicone
19 (F)	85995546	Fluorosilicone	AS3582-128	Silicone
21 (G)	85995547	Fluorosilicone	AS3582-130	Silicone
23 (H)	85995548	Fluorosilicone	AS3582-132	Silicone
25 (J)	85995549	Fluorosilicone	AS3582-134	Silicone

Note: All dimensions are in millimeters (mm)

Contact variations

Contact variations summary

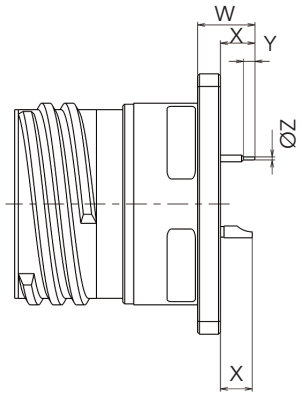

Type 21: Square flange receptacle

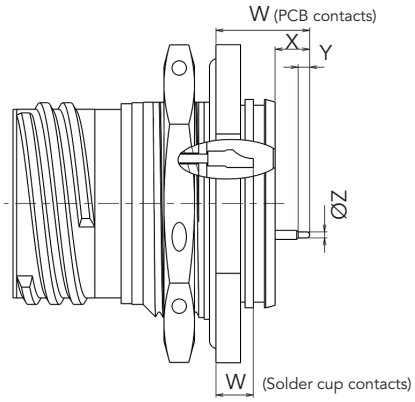

Type 23: Jam nut receptacle

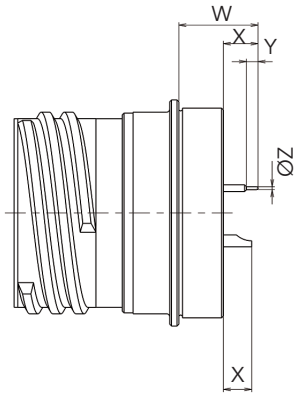

Type 25: Solder mount receptacle

Type of contact	Specification	Type of shell	Contact size	W max	X min	Y min	ØZ max
Solder cup (P)	WF (F38999)	21	20 & 22	N/A	3.45	N/A	N/A
		23	20 & 22	4.5	N/A	N/A	N/A
		25	20 & 22	N/A	2.3	N/A	N/A
PCB (C)	WF (F38999)	21	16	6.65	3.45	N/A	N/A
			20			0.89	0.71
			22			0.89	0.38
		23	16	11.5	3.3	N/A	N/A
			20			0.89	0.71
			22			0.89	0.38
		25	16	10.75	3.4	N/A	N/A
			20	12.15		0.89	0.71
			22	13.55		0.89	0.38
	840 (8D)	21	20	8.05	4.85	4.5	0.62
			22	7.32	4.12	3.82	0.53
		23	20	11.8	3.6	4.5	0.62
			22	10.6	2.4	5.75	0.53
		25	20	10.15	3.7	4.5	0.62
			22	9.42	2.97	3.82	0.53
	850 (8D)	21	20	13	9.8	6	0.62
			22	10.69	7.49	7.35	0.53
		23	20	15.3	7.1	6.25	0.62
			22	16.2	8	9.25	0.45
		25	20	15.1	8.65	6	0.62
			22	12.79	6.34	7.35	0.53

Note: for other contact length, please consult us.

Note: All dimensions are in millimeters (mm)

8D SERIES

© 2019 SOURIAU - SOURIAU is a registered trademark

8D Series

Range Extension

- micro38999 146
- ELIO® fiber optic hermetic 146
- Rack & panel 147
- 230V connector 147
- 8D8/8D9 Series 148
- 8DB bulkhead feedthrough 148
- 8PS Series 149
- 8TFD filter connector 149
- 8D36 lanyard release 150

Product range extension

micro38999

A complete miniature range: threaded (8DA), break away (8BA) & bayonet (8LTA). Space saving with scoop proof connector for harsh applications.

A compact solution:
. Diameter up to 45% smaller than size 9 (D38999).
. Up to 50% shorter.
. Integrated backshell: Cost and space saving.

A high density solution:
. With #26 contacts (according to 39029).
. 5 layouts (size 3, 5 and 7 with #22 & #26).

Excellent features:
. Designed for D38999 requirements.
. IP67 sealing when mated.
. Stainless steel shell (1500 matings) & aluminum shell (500 matings).

RoHS and Cadmium free:
. Available in zinc nickel (RoHS) plating, as well as nickel and olive drab cadmium.

See «micro38999 Series, High Vibration Miniature Connectors» catalog on www.souriau.com

ELIO® Fiber Optic Hermetic

Hermetic receptacles or feedthrough based on 38999 shells, intermateable with 38999 Series III plug populated ELIO® contacts.

Truly hermetic:
. Leak rate: < 10^{-9} atm.cm^3/s.
. Temperature range: -55°C to 200°C.

Wide range of layouts:
. From 1 to 24 fiber optic channels.

Customs:
. Versatile technology that can be adapted to your needs.

Product range extension

Rack & Panel

Sealed rack & panel for blind connection. A 100% scoop proof connector with quick connection in hard-to-reach areas.

Blind connection:
. Easy & fast connection without any coupling/uncoupling between a float-mounting unit & a fixed unit.

Float-mounting unit - rack:
. Female crimp contacts.
. Mounting on the cabinet side.
. Angular orientation with a key.
. Possibility to supply rear accessories.

Misalignment catching:
. Longitudinal, axial and angular.

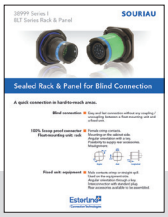

See «38999 Series I - Rack & Panel 8LT» product news on www.souriau.com

230V Connector

The use of higher voltage to reduce cable weight has lead to the development of double voltage connectors.

Robust design and materials:
. In high altitude un-pressurized areas, higher voltages increase electrical partial discharges: Risk of contact short circuits. Our 230V connector avoids this risk!

No possible mismatch:
. Specific T and V clocking to avoid mating with a non 230V qualified counterpart.

Flexible offering:
. Available in standard watertight and hermetic connectors with the same performance.
. Available in composite and stainless steel shells.

See «230 Volt EN3645 Derived Connectors» product news on www.souriau.com

Product range extension

8D8/8D9 Series

8D8: high vibration push-pull connector.
8D9: lanyard release, high performance 38999 quick release.

A wide range with excellent performances:
. MIL-DTL-38999 layouts and contacts.
. MIL-DTL-38999 Series electric performances.
. Scoop proof.
. Compatible with standard backshells 38999 Series III.
. Very high performance coupling with ball locking concept, check of locking by free ring when mated.

Easy to connect-disconnect:
. 8D8: ideal for restricted space mating.
. 8D9: simple push to connect - pull to disconnect.

High vibration performance:
. Up to 44g
. 8D8: ideal for mil-aero and space applications.
. 8D9: ideal for missiles, inter-stage separation, UAVs, space probes.

8DB Bulkhead Feedthrough

Double Receptacle mounted on panel allows cable plug connection on both sides of the bulkhead. Create a permanent sealed barrier on your panel suitable for pressurized or depressurized areas.

Easy integration:
. Standard 38999 mounting interface (square flange, jam nut).
. Easy modular assembly and connection.
. Time saving for maintenance.
. The ideal interconnect solution for aircraft pressurized/non pressurized panels.

Reinforced sealing:
. Feedthrough sealing even when unmated (10^{-6} atm.cm^3/s).
. Permanent sealing barrier on panel (O'rings).
. Glass fused hermetic version available (<10^{-8} atm.cm^3/s) for fuel tanks/space systems.

A large platform available:
. All 38999 Series III layouts (signal and power contacts).

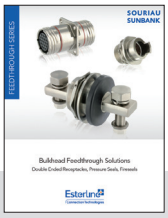

See «Bulkhead Feedthrough Solutions» catalog on **www.souriau.com**

Product range extension

8PS Series

Sealed cable feedthrough. Allows a bundle of cables to cross through the bulkhead without any contact junctions.

All cables are individually sealed inside the feedthrough:
. For maximum MTBF by eliminating cable termination and contact junction.
. When maximum continuity is required for copper cables.
. To suppress contact attenuation with Fiber optic cables.

Easy and safe installation.

Reinforced sealing.

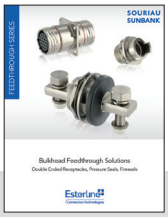

See «Bulkhead Feedthrough Solutions» catalog on www.souriau.com

8TFD Filter Connector

EMI-RFI filters and lightning protection in composite light-weight shell.

Space saving:
. Complete filter solution in standard shell.
. No need for filter PCB inside equipment.
. Smaller equipment envelope required.

Excellent filter performance:
. Excellent performance, comparable to aluminum shell EMI-RFI filter connectors.

Highly corrosion resistant:
. 2000 hours salt spray in either nickel or olive drab finish.

Wide range of layouts available:
. SOURIAU EMI-RFI Filter 38999 Series III connectors are available in aluminum, marine bronze, and stainless steel shells.

Product range extension

8D36 Lanyard Release

Field repairable / MIL-STD-1760 umbilical. Self-alignment, blind connector mating & safe operational solution to weapon releases.

Safe quick disconnect at high speed:
. Robust unlocking system : 9.15m/s ±10%.

Field repairable:
. Damaged coupling mechanism can be removed and fully replaced without need to disassemble the electric harness or cable backshell.

High vibration performances:
. Random: 44 G RMS, Sine: 60G with angular separation up to 20° (maximum)

Reliable People, Reliable Solutions

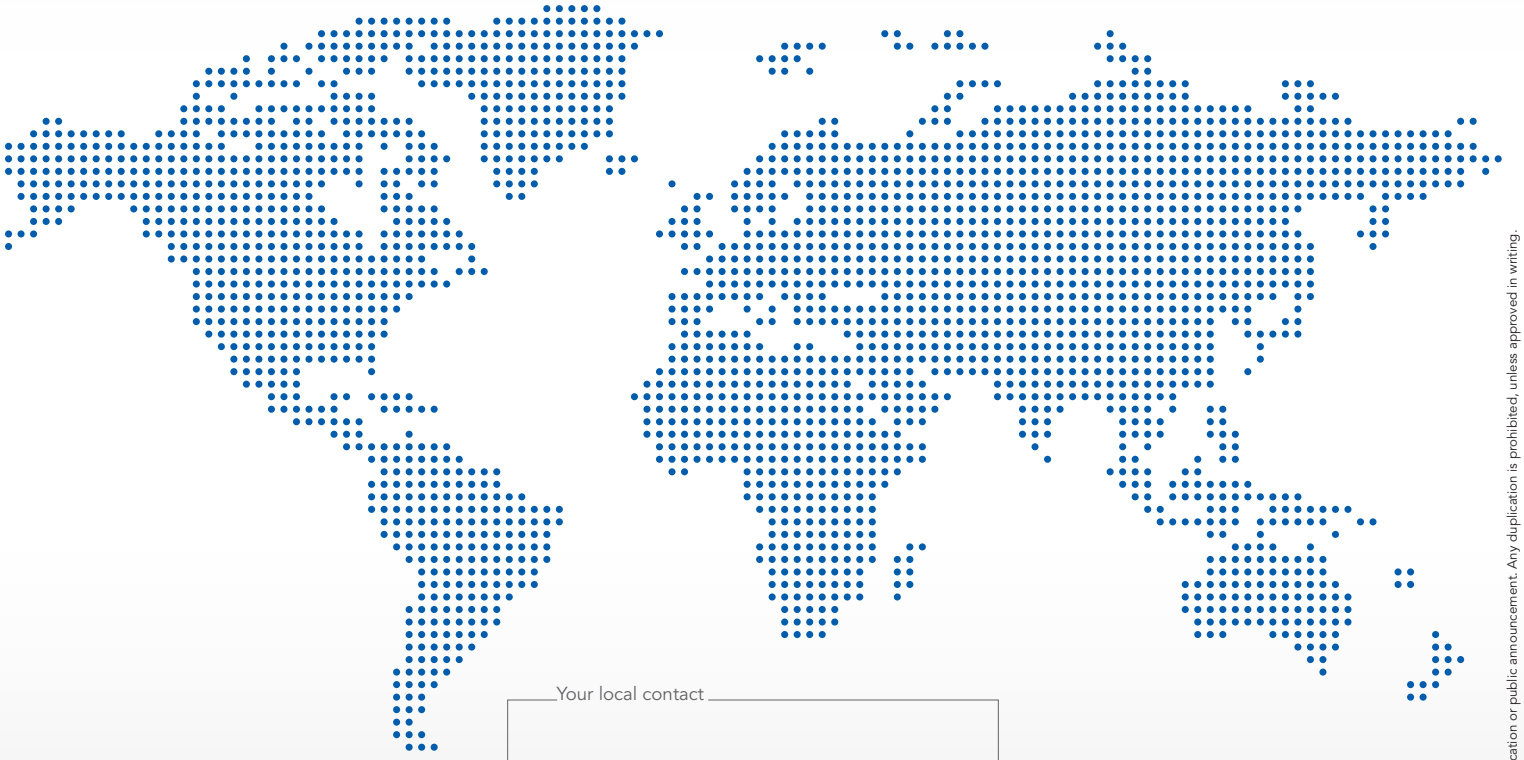

Your local contact

Our contribution to environmental protection:
This catalog is printed on PEFC certified paper
Advancement of sustainable wood cultivation. www.pefc.org
PEFC™ 10-31-1299

JOWO Systemtechnik AG

JOWO - Systemtechnik AG
Lange Wand 12
27753 Delmenhorst
Germany

Tel.: +49 (0) 916 495-0
Fax: +49 (0) 916 495-54
Mail: info@jowosy.de
Web: www.jowosy.de

WCA8DWUSEN10 © Copyright SOURIAU February 2019 - SOURIAU is a registered trademark
All information in this document presents only general particulars and shall not form part of any contract. All rights reserved to SOURIAU for changes without prior notification or public announcement. Any duplication is prohibited, unless approved in writing.